DOWNERS GROVE PUBLIC LIBRARY
BOARD OF TRUSTEES
REGULAR MONTHLY MEETING
OCTOBER 24, 2018, 7:30 P.M.
LIBRARY MEETING ROOM

AGENDA

1. Call to Order

2. Roll Call

3. Welcome to Visitors

4. Approval of Minutes

5. Financial Matters
   a. September 2018 Financial Report
   b. October 2018 Invoices — Requested Action: Approval

6. Public Comment on Agenda Items

7. Public Comment on Other Library Business

8. New Business
   a. Personnel Policy Draft — Requested Action: Discussion

9. Unfinished Business
   a. 2019 HVAC, Boilers, and Controls Project Release to Bid
      Requested Action: Approval

10. Library Director's Report

11. Trustee Comments and Requests for Information

12. Adjournment

DOWNERS GROVE PUBLIC LIBRARY
BOARD OF TRUSTEES
REGULAR MONTHLY MEETING
SEPTEMBER 26, 2018, 7:30 P.M.
LIBRARY MEETING ROOM

DRAFT MINUTES

1. **Call to Order**. President Graber called the meeting to order at 7:30 p.m.

2. **Roll Call**. Members present: Trustee Ed Earl, Trustee Susan Eblen, Trustee Swapna Gigani, Trustee David Humphreys, Trustee Kim Stapleton, President Jonathan Graber. Absent: None.

   Also present: Director Julie Milavec, Assistant Director Jen Fredericks, Executive Assistant Katelyn Vabalaitis, Friends of the Library President Joni Hansen, Downers Grove Public Library Foundation Treasurer Ed Pawlak.

3. **Welcome to Visitors**. President Graber welcomed visitors and thanked them for their interest in the library.

4. **Approval of Minutes**. It was moved by Earl and seconded by Eblen THAT the Minutes of the August 29, 2018 Regular Monthly Meeting be approved as presented. Motion passed by voice vote.

5. **Financial Matters**.
   a. <u>August 2018 Financial Report</u>. Milavec presented the report. Things are moving along as planned. The revenue side is right on track and the expenditures are the same, with some budget lines under their anticipated amounts. The Board will be seeing more showing up on the Capital Replacement Fund invoice list as the building project gets underway.

   b. <u>September 2018 Invoices</u>. It was moved by Earl and seconded by Humphreys THAT the payment of September 2018 capital replacement invoices totaling $31,624.00, the payment of September 2018 operating invoices totaling $118,268.65, the acceptance of September 2018 credit memos totaling $40.03, and the ratification of August 2018 payrolls totaling $303,377.09 be approved. Roll call: Ayes: Earl, Eblen, Gigani, Humphreys, Stapleton, Graber. Nays: None. Abstentions: None.

6. **Public Comment on Agenda Items**. President Graber invited comment. There was none.

7. **Public Comment on Other Library Business**. President Graber invited comment. There was none.

8. **New Business**.
   a. <u>FY2019 Illinois Public Library Per Capita Grant Application Requirements</u>.
      As part of the Illinois Public Library Per Capita Grant requirements, the Board is supposed to discuss four items:
      1. Standards Chapter Review
      2. Trustee Facts File Review
      3. Complete one free online education opportunity focusing on meeting the needs of patrons with challenges or disabilities.
      4. Board should familiarize themselves with the Illinois Veterans' History Project

      Milavec led a discussion and review of these requirements. Humphreys suggested mentioning the Illinois Veterans' History Project in a small blurb of the Discoveries newsletter. Graber suggested a display in the library around Veterans Day to highlight the Illinois Veterans' History Project.

9. **Unfinished Business**. There was none.

10. **Library Director's Report**. Milavec presented the report (attached). Milavec thanked the Board for their patience on the policy manual revision. On a sad note, Milavec acknowledged the passing of Linda Kunze, the Executive Director of the Downers Grove Downtown Management Corporation. She was a force to be reckoned with for the downtown and the success of Downtown Management owes a lot to Linda and her work. This may be Susan Eblen's last meeting as her term ended August 31 and she is serving until replaced. Milavec thanked Trustee Eblen for her ten years of service. President Graber asked how many candidates remained for the Community Engagement Coordinator and Milavec responded that two candidates are coming back for second interviews.

11. **Trustee Comments and Requests for Information**.
    President Graber thanked Trustee Susan Eblen for her service to the library.

    Trustee Eblen commented that serving on the Board was a wonderful experience and it has been a good group of people.

12. **Adjournment**. President Graber adjourned the meeting at 7:48 p.m.

DOWNERS GROVE LIBRARY 9/30/2018

	Library fund	Building & Equip Replacement Fund
CASH & INVESTMENTS	$ 2,395,023	$ 1,705,904
FUND BALANCE	2,289,957	$ 1,705,904

Revenue by Object Report

Village of Downers Grove
9/1/2018 through 9/30/2018

Grand Totals

Object/Title	Adjusted Estimate	Revenues	Year-to-date Revenues	Balance	Prct Rcvd
4101 Current Property Taxes	5,182,314.00	1,212,928.31	5,023,345.15	158,968.85	96.93
4109 Prior Year Property Taxes	100.00	0.00	3.25	96.75	3.25
4313 Personal Property Replacement Tax	60,000.00	0.00	46,624.69	13,375.31	77.71
4410 Sales of Materials	10,000.00	341.85	7,648.96	2,351.04	76.49
4502 Charges For Services	15,000.00	1,275.44	32,692.99	-17,692.99	217.95
4509 Fees For Non-Residents	16,000.00	1,752.00	14,762.50	1,237.50	92.27
4571 Rental Fees	4,500.00	520.00	5,600.00	-1,100.00	124.44
4581 Fines	42,000.00	2,675.25	27,985.95	14,014.05	66.63
4590 Cost Recovered For Services	15,000.00	1,086.83	7,840.10	7,159.90	52.27
4610 Federal, Operational Grants	0.00	0.00	0.00	0.00	0.00
4620 State, Operational Grants	36,910.00	0.00	61,516.25	-24,606.25	166.67
4711 Investment Income	2,000.00	22.82	55.76	1,944.24	2.79
4712 Investment Income - Property Taxes	0.00	0.00	1,969.24	-1,969.24	0.00
4820 Contributions, Operating	5,000.00	1,500.00	5,793.44	-793.44	115.87
4988 Bond Issue Proceeds	0.00	0.00	0.00	0.00	0.00
4997 Prior Period Adjustments	0.00	0.00	0.00	0.00	0.00
Grand Totals	5,388,824.00	1,222,102.50	5,235,838.28	152,985.72	97.16

Expenditures by Object Report

Village of Downers Grove
9/1/2018 through 9/30/2018

Grand Totals

Object/Title	*Adjusted Appropriation*	*Expenditures*	*Year-to-date Expenditures*	*Year-to-date Encumbrances*	*Balance*	*Prct Use*
5870 Capital Equipment	660,000.00	31,624.00	69,911.48	0.00	590,088.52	10.5
Grand Totals	660,000.00	31,624.00	69,911.48	0.00	590,088.52	10.5

Expenditures by Object Report

Village of Downers Grove
9/1/2018 through 9/30/2018

Grand Totals

Object/Title	Adjusted Appropriation	Expenditures	Year-to-date Expenditures	Year-to-date Encumbrances	Balance	Prct Use
5101 Salaries, Exempt	1,328,658.00	98,899.21	1,027,647.12	0.00	301,010.88	77.3
5111 Salaries, Non-Exempt	342,852.00	14,884.96	147,577.16	0.00	195,274.84	43.0
5119 Part-Time Employee Wages	1,241,170.00	85,899.95	864,812.37	0.00	376,357.63	69.6
5131 IMRF Pension Contributions	257,339.00	17,343.18	188,377.35	0.00	68,961.65	73.2
5133 Medicare Contributions	41,935.00	2,826.88	29,012.72	0.00	12,922.28	69.1
5134 Social Security Contributions	179,315.00	12,087.02	124,051.74	0.00	55,263.26	69.1
5190 Life Insurance	1,044.00	68.00	622.20	0.00	421.80	59.6
5191 Health Insurance	360,420.00	25,815.00	221,212.50	0.00	139,207.50	61.3
5195 Optical Insurance	2,492.00	162.32	1,413.89	0.00	1,078.11	56.7
5197 Dental Insurance	38,808.00	2,399.60	20,403.40	0.00	18,404.60	52.5
5210 Supplies	87,200.00	8,353.06	61,562.70	0.00	25,637.30	70.6
5251 Maintenance Supplies	18,000.00	3,636.67	18,107.37	0.00	-107.37	100.6
5280 Small Tools & Equipment	34,600.00	1,333.65	10,893.16	0.00	23,706.84	31.4
5302 Dues And Memberships	7,500.00	415.00	6,668.00	0.00	832.00	88.9
5303 Seminars, Conferences & Meetings	34,250.00	801.14	15,138.70	0.00	19,111.30	44.2
5308 Recognition Program-Staff	5,000.00	31.45	4,206.10	0.00	793.90	84.1
5315 Professional Services	60,000.00	1,857.97	30,991.56	0.00	29,008.44	51.6
5322 Personnel Recruitment	2,000.00	150.00	150.00	0.00	1,850.00	7.5
5323 Special Legal	6,000.00	862.40	3,333.40	0.00	2,666.60	55.5
5346 Data Processing Services	105,000.00	0.00	84,756.88	0.00	20,243.12	80.7
5380 Printing Services	18,700.00	2,911.00	11,621.00	0.00	7,079.00	62.1
5391 Telephone	20,000.00	1,354.65	16,705.59	0.00	3,294.41	83.5
5392 Postage	25,500.00	5,000.00	11,723.50	0.00	13,776.50	45.9
5407 Advertising And Public Relations	20,375.00	177.75	10,104.34	0.00	10,270.66	49.5
5420 Insurance - Other Policies	43,000.00	0.00	39,630.00	0.00	3,370.00	92.1
5430 Building Maintenance Services	90,000.00	11,158.85	68,460.43	0.00	21,539.57	76.0
5450 Cleaning Services	80,000.00	5,545.00	52,780.00	0.00	27,220.00	65.9
5461 Utilities	25,000.00	1,292.15	12,735.89	0.00	12,264.11	50.9
5470 Other Equipment Repair And Maintenance	11,500.00	2,088.97	9,429.01	0.00	2,070.99	81.9
5481 Rentals	20,500.00	3,459.07	17,468.63	0.00	3,031.37	85.2

Expenditures by Object Report

Village of Downers Grove
9/1/2018 through 9/30/2018

Grand Totals *[Continued]*

Object/Title	*Adjusted Appropriation*	*Expenditures*	*Year-to-date Expenditures*	*Year-to-date Encumbrances*	*Balance*	*Prct Use*
5620 Recoverables	4,000.00	107.40	1,886.81	0.00	2,113.19	47.1
5630 Contingency	10,000.00	0.00	0.00	0.00	10,000.00	0.0
5690 Unemployment Compensation	10,000.00	0.00	20,986.00	0.00	-10,986.00	209.8
5770 Capital Equipment	60,000.00	1,051.96	16,240.54	0.00	43,759.46	27.0
5851 Electronic Resources	223,000.00	25,095.27	175,149.38	0.00	47,850.62	78.5
5852 Print Materials	345,000.00	26,756.56	242,769.70	0.00	102,230.30	70.3
5853 Audiovisual Materials	148,500.00	9,017.82	91,753.98	0.00	56,746.02	61.7
5870 Capital Equipment	65,000.00	8,213.60	33,892.54	0.00	31,107.46	52.1
5880 Intangible Assets (Software)	43,000.00	796.33	27,720.94	0.00	15,279.06	64.4
5910 Transfer For Capital Projects	350,000.00	0.00	350,000.00	0.00	0.00	100.0
Grand Totals	5,766,658.00	381,853.84	4,071,996.60	0.00	1,694,661.40	70.6

Invoice Edit Listing

Village of Downers Grove

Capital Replacement

October 24, 2018

Vendor Totals

Vendor	Number of Invoices	Amount	Retained/Withheld Amount	Total
014548 PRODUCT, LLC	1	3,184.20	0.00	3,184.20
Grand Total:	1	3,184.20	0.00	3,184.20

INVOICES OF NOTE - CAPITAL REPLACEMENT FUND

For Library Board Meeting on October 24, 2018

2018 Budget

014548	Product, LLC (construction, printing, mileage)	$3,184.20

Invoice Edit Listing
Village of Downers Grove
October 24, 2018

Vendor Totals

Vendor		Number of Invoices	Amount	Retained/Withheld Amount	Total
018213	AMAZON CAPITAL SERVICES, INC.	1	90.32	0.00	90.32
000322	AMAZON.COM	1	2,752.38	0.00	2,752.38
000403	AT&T	1	260.54	0.00	260.54
018942	AWE ACQUISITION, INC.	1	5,150.00	0.00	5,150.00
000672	BAKER & TAYLOR - L0217582	75	24,600.55	0.00	24,600.55
016893	BIBLIOTHECA, LLC	1	1,172.48	0.00	1,172.48
015802	C & C SYSTEMS LLC	1	6,600.00	0.00	6,600.00
001223	CASE LOTS INC	1	106.27	0.00	106.27
008323	CENGAGE LEARNING	14	983.86	0.00	983.86
001277	CENTER POINT PUBLISHING	2	182.16	0.00	182.16
002319	CHAMBER630	1	69.75	0.00	69.75
001553	COMCAST CABLE	1	427.24	0.00	427.24
016094	DE LAGE LANDEN FINANCIAL SVC, INC.	1	898.07	0.00	898.07
002056	DEMCO INC	2	1,020.90	0.00	1,020.90
002359	DOWNERS GROVE SANITARY DIST.	2	245.02	0.00	245.02
017328	ELM USA, INC.	1	347.75	0.00	347.75
005572	FIA CARD SERVICES, N.A.	13	7,410.17	0.00	7,410.17
018270	FITZGERALD'S ELECTRICAL, CONTRACTING, INC.	1	240.00	0.00	240.00
015168	FREDERICKS, JENNIFER	1	33.46	0.00	33.46
013544	GOOGLE, INC.	1	670.83	0.00	670.83
003188	GRAHAM CRACKERS COMICS, LTD.	2	547.66	0.00	547.66
008770	GRAINGER	1	57.36	0.00	57.36

Invoice Edit Listing

Village of Downers Grove

October 24, 2018

Vendor Totals

Vendor		Number of Invoices	Amount	Retained/Withheld Amount	Total
018411	HAYES MECHANICAL, LLC	2	2,227.00	0.00	2,227.00
007622	HRYCEWICZ, SHARON	2	276.99	0.00	276.99
003567	ILLINOIS DEPT OF INNOVATION &, TECHNOLOGY	1	126.00	0.00	126.00
009880	IMAGE SYSTEMS &	2	815.27	0.00	815.27
012834	IPROMOTEU	1	1,200.14	0.00	1,200.14
018694	JOHNSON CONTROLS FIRE, PROTECTION LP	1	184.00	0.00	184.00
010993	KENT ADHESIVE PRODUCTS COMPANY	1	283.93	0.00	283.93
004812	KLEIN, THORPE AND JENKINS, LTD	1	253.80	0.00	253.80
017676	KLENK, AMANDA	1	49.27	0.00	49.27
018876	LIBRARY IDEAS, LLC	1	773.95	0.00	773.95
017280	MARTIN, JOHN	1	56.57	0.00	56.57
010916	MARY THOMAS	2	63.25	0.00	63.25
018877	MASTNY, NORA	1	65.07	0.00	65.07
005613	MEDLIN COMMUNICATIONS, INC	1	200.00	0.00	200.00
005866	MIDWEST TAPE	25	7,595.50	0.00	7,595.50
006161	NICOR GAS	1	651.16	0.00	651.16
018695	OLIVER LAWRENCE	1	800.00	0.00	800.00
012499	OVERDRIVE, INC.	2	4,279.95	0.00	4,279.95
006520	PENWORTHY COMPANY	1	367.85	0.00	367.85
018491	PEOPLEFACTS, LLC	1	29.28	0.00	29.28
018885	PRECHEL, AMELIA	2	220.17	0.00	220.17
006698	PRINT SMART	2	238.14	0.00	238.14
006859	R.H. DONNELLEY	1	14.19	0.00	14.19

Invoice Edit Listing

Village of Downers Grove

October 24, 2018

Vendor Totals

Vendor		Number of Invoices	Amount	Retained/Withheld Amount	Total
006897	RANDOM HOUSE, INC	2	956.25	0.00	956.25
006944	RECORDED BOOKS, LLC	4	212.11	0.00	212.11
016364	RENELL, ALLYSON JANET	1	51.83	0.00	51.83
016519	RIDDLE, KIRA	1	21.80	0.00	21.80
017836	SCHILLERS	1	49.05	0.00	49.05
007604	SERVICEMASTER COMMERCIAL CLEAN	2	5,699.01	0.00	5,699.01
018941	SERVICEMASTER-S&R SYSTEMS	1	2,717.62	0.00	2,717.62
007612	SHANES OFFICE SUPPLY CO	8	1,154.31	0.00	1,154.31
007676	SIGNS NOW	1	392.10	0.00	392.10
013611	SKOCIK, TRACI	2	48.03	0.00	48.03
018892	SOHUM SO WHAT CORP.	1	250.00	0.00	250.00
018878	STAMOGIANNOS, MISTY	1	20.25	0.00	20.25
007861	STEPHENS PLUMBING AND HEATING,	1	282.00	0.00	282.00
012698	SWAN	1	13,404.50	0.00	13,404.50
015655	T-REXPLORERS, LLC	1	400.00	0.00	400.00
014744	TEAM ONE REPAIR, INC.	1	638.40	0.00	638.40
016744	TERRENCE M. LYNCH	1	275.00	0.00	275.00
008391	TODAY'S BUSINESS SOLUTIONS	1	82.72	0.00	82.72
016841	TSAI FONG BOOKS, INC.	4	299.57	0.00	299.57
011517	UNIQUE MANAGEMENT SERVICES, IN	1	71.60	0.00	71.60
018458	URBAN ELEVATOR SERVICE, LLC	2	566.00	0.00	566.00
009056	XO HOLDINGS, LLC, DBA XO COMMUNICATIONS SVC	1	656.17	0.00	656.17
Grand Total:		218	102,886.57	0.00	102,886.57

INVOICES OF NOTE

For Library Board Meeting on October 24, 2018

2018 Budget

018942	AWE Acquisition, Inc. (new computers for kids room)	$5,150.00
015802	C & C Systems, LLC (security cameras)	$6,600.00
018411	Hayes Mechanical, LLC (repair A/C low on R0410A/flare fitting)	$2,227.00
012834	iPromoteU (polo shirts for Facilities and Monitors)	$1,200.14
018876	Library Idea, LLC (AV materials)	$773.95
018695	Oliver Lawrence (adult program/materials)	$800.00
018941	ServiceMaster - S&R Systems (mold remediation)	$2,717.62
012698	SWAN (fees)	$13,404.50

Credit Memo Edit Listing

Village of Downers Grove
October 24, 2018

Vendor Totals

Vendor	Number of Memos	Amount
005866 MIDWEST TAPE	1	6.00
Grand Total:	1	6.00

Library Credit Card Details for the October 24, 2018 Board Meeting

		Julie Milavec			
971	5280	Small Tools & Equipment	Trustee reference materials	$	115.00
971	5303	Seminars, Mtgs, & Conferences	Welcome lunch for Amy Prechel	$	102.11
971	5308	Staff Recognition	Memorial flowers for Linda Kunze	$	101.74
			Total	**$**	**318.85**
		Katelyn Vabalaitis			
971	5210	Supplies	Toners	$	216.89
971	5280	Small Tools & Equipment	Trustee reference materials, paper cutter	$	80.65
971	5303	Seminars, Mtgs, & Conferences	Adminstrative seminar	$	119.20
973	5853	AV Materials	Materials for STEM kits	$	530.29
978	5470	Other Equipment Repair & Maint	Wing nuts	$	20.86
			Total	**$**	**967.89**
		Ian Knorr			
978	5210	Supplies	Water filters	$	120.27
978	5280	Small Tools & Equipment	Drywall, wood screws,paint, trays and rollers	$	309.10
978	5470	Other Equipment Repair & Maint	Clock	$	183.06
				$	**612.43**
		Elizabeth Matkowski			
971	5770	Capital Equipment	Double sided slatwall merchandiser	$	339.75
972	5210	Supplies	Teen program supplies	$	43.93
972	5280	Small Tools & Equipment	Photobooth backdrop	$	98.67
972	5303	Seminars Mtgs, & Conferences	Notary training, Fall Networking luncheon	$	50.00
972	5315	Professional Services	SAT and ACT materials	$	825.00
972	5852	Printed Materials	Adult materials	$	34.30
			Total	**$**	**1,391.65**
		Karen Bonarek			
972	5210	Supplies	Program supplies	$	50.22
976	5315	Professional Services	Bagels for job workshop, DG trick or treat supplies	$	127.94
				$	**178.16**
		Amelia Prechel			
977	5210	Supplies	Office supplies	$	14.95
977	5303	Seminars Mtgs, & Conferences	ILA registration, Tinley Park SLUI meeting	$	285.00
972	5852	Printed Materials	Adult materials	$	12.95
			Total	**$**	**312.90**
		Sharon Hrycewicz			
973	5210	Supplies	Supplies and food for programs	$	33.95
973	5853	AV Materials	Tech toys	$	467.20
			Total	**$**	**501.15**

			Allyson Renell		
973	5210	Supplies	program supplies	$	97.46
973	5303	Seminars, Mtgs, & Conferences	ALSC Conference hotel, meals and transportation	$	856.53
			Total	**$**	**953.99**
			Traci Skocik		
973	5210	Supplies	Program supplies	$	154.82
973	5280	Small Tools & Equipment	Speaker system	$	104.95
973	5852	Printed Materials	Childeren materials	$	95.45
			Total	**$**	**355.22**
			Christine Lees		
971	5308	Staff Recognition	EOM monthly recongnition	$	74.00
974	5210	Supplies	Office supplies	$	309.40
974	5470	Other Equipment Repair & Maint	Credit card machine testing	$	2.00
			Total	**$**	**385.40**
			Paul Regis		
975	5210	Supplies	Office supplies	$	11.16
975	5280	Small Tools & Equipment	Photography equipment, keyboard cleaner, batteries	$	408.07
975	5770	Capital Equipment	Slatwall panel	$	182.89
			Total	**$**	**602.12**
			Melody Danley		
976	5210	Supplies	Whiteboard signs, fabric for window displays	$	293.20
976	5407	Advertising & Public Relations	Imprinted pencils, Facebook ad	$	235.79
			Total	**$**	**528.99**
			Jen Fredericks		
971	5210	Supplies	Office supplies	$	26.96
971	5303	Seminars, Mtgs, & Conferences	Service design, Tinley Park SLUI meeting	$	45.00
971	5308	Staff Recognition	Staff lunch	$	51.52
972	5852	Printed Materials	Adult materials	$	96.00
976	5210	Supplies	Document holders and supplies	$	61.59
977	5210	Supplies	Water, office supplies	$	20.35
			Total	**$**	**301.42**
			Library Credit Card October 2018 Totals	**$**	**7,410.17**

PAYROLLS FOR SEPTEMBER 2018

SEPTEMBER 14	$96,874.27
SEPTEMBER 28	$102,809.85
TOTAL SEPTEMBER 2018 PAYROLLS	$301,215.37

DOWNERS GROVE PUBLIC LIBRARY
BOARD OF TRUSTEES
OCTOBER 24, 2018

ITEM 8A
Personnel Policy Draft

Library attorney Dennis Walsh is currently reviewing this draft. The management team reviewed, edited, and provided feedback the initial draft that were incorporated into this draft. Because it contains some significant changes, I wanted the Board to have a chance to discuss and comment on it.

Only three major changes are included:

- Changes to Vacation
  The Library offers vacation leave to all employee classifications. While some libraries offer vacation leave to part time employees, it is very uncommon to offer vacation leave for employees working less than 20 hours per week. Current policy provides the same pro-rated vacation leave for all part time employees, starting at 2 weeks to a maximum of 4 weeks. This draft separates part time IMRF qualified staff (working 20 hours per week or more) and part time non-IMRF staff (working 19 hours per week or less). It reduces vacation leave for part time non-IMRF qualified staff to begin at 1 week to a maximum of 3 weeks. Generally, part time non-IMRF qualified staff have more flexibility to trade shifts and request schedule changes to meet their time off needs. Especially when accruing 4 weeks of vacation leave per year, those staff are frequently unable to use their accrued time off without adversely affecting department schedules and desk staffing.
- Removed Leave Sharing with Employees Facing Major Injury or Illness
  There has been no leave in the “leave bank” in more than 3 years. The only inquiries regarding this were by retiring staff who chose instead to convert unused leave to additional service with the Illinois Municipal Retirement Fund.
- Changes to General Leave of Absence
  The changes include extending General Leaves of Absence to 12 weeks, at the Library Director’s discretion, and reducing the amount of time someone must be employed at the Library to 6 months. This would allow General Leave to cover maternity leaves of part time employees and provide for full time employees not yet qualifying for Family Medical Leave.

The following minor changes were made:

- Meal and Rest Breaks - Tightened up use of Rest Breaks to extend Meal Breaks and called out mandated break periods and those not required by law.
- Sick Leave - Added required doctor’s note for illness of more than 3 consecutive days.

- Meetings, Workshops, and Conferences - Added reimbursement information, including IRS per diem and mileage rates.
- Membership in Professional Organizations - Added memberships in professional organizations beyond Illinois Library Association and American Library Association.
- Compassionate Leave - Added leave under this section for catastrophic personal emergency and for services held at a later time.
- Parking Permits – Added employee responsibility for fee to replace lost parking permit.
- Family Medical Leave Act (FMLA) - Updated with the latest version from HR Source (formerly Management Association of Illinois).
- Victims' Economic Security and Safety Act (VESSA) - Updated with the latest version from HR Source (formerly Management Association of Illinois).
- Continuation of Benefits – Added retiree and disability coverage statement

The following new sections were added to formalize current practice, address missing topics, and meet new requirements:

- Amendments
- Administration
- Pre-Employment Testing and Criminal Background Checks
- Immigration Compliance
- Introductory Period
- Employee Handbook
- Employee Code of Conduct
- Employee Privacy
- Payment of Wages
- Deductions from Pay
- Time Records
- Library Information and Property
- Contest and Program Prizes
- Solicitation and Fundraising for Outside Organizations
- Violence in the Workplace
- Reference Checks
- Personnel File Review
- Internal Complaints
- Bloodborne Pathogens
- Benefits Disclaimer
- Flexible Spending Account
- Illinois Municipal Retirement Fund (IMRF)
- Military Leave

The following sections were removed and/or incorporated into other sections:

- General
- In-Service
- Open Door Communications/Problem-Solving Procedure
- Rules Concerning Attendance
- Whistleblower Compliance
- Staff Obligations
- Conduct and Work Rules

The following sections were edited to simplify or clarify the existing policy:

- At-Will Employment
- Equal Employment Opportunity
- Appointments
- Employee Classifications
- Recruitment and Hiring
- Reasonable Accommodations
- Work Day, Work Week, and Work Year
- Scheduling and Attendance
- Overtime
- Compensation for Work on Sunday
- Use of Library Equipment
- Driver's License and Proof of Insurance
- Smoke-Free Illinois Act
- Employment Verification and Letters of Reference
- Performance Evaluations
- Progressive Discipline and Termination
- Anti-Discrimination and Anti-Harassment
- Alcohol and Drug-Free Workplace
- Insurance Benefits
- Workers Compensation
- Parking Permits
- Holidays
- Jury or Other Civic Duty
- Resignations and Terminations
- Retirement

3 Personnel

The Personnel Policy addresses the employment practices of the library.

3.1 At Will Employment

The Personnel Policy does not create a contract of employment. It is intended to describe the library's policies and employee benefits. Unless an employee has an employment agreement signed by the Board of Library Trustees, employment is at-will and may be terminated, with or without cause, and with or without notice, at any time at the option of either the employee or the library.

3.2 Amendments

The Board of Library Trustees reserves the right to amend its Personnel Policy at any time, change, limit, restrict, remove, revoke or eliminate any right or benefit given to any library employee hereunder.

3.3 Administration

Legal responsibility is vested in the Board of Library Trustees which is the policy-forming body of the Library. The responsibilities of the Board of Library Trustees includes selection of a Library Director, who is the administrative officer of the Library. The Library Director is responsible for the implementation of the policies and decisions of the Board of Library Trustees as they affect employees. The Library Director is in overall charge of Library personnel and is responsible for the hiring and termination of all employees, the assignment of duties, establishing standards of service and staff development. In the absence of the Library Director, the Assistant Director serves as the administrative officer of the Library.

3.4 Equal Opportunity Employment

The Downers Grove Public Library affords equal employment opportunities as required by applicable law. This policy of equal employment applies to all aspects of the employment relationship, including but not limited to: initial consideration for employment; job placement and assignment of responsibilities; performance evaluation; promotion and advancement; compensation and fringe benefits; training and professional development opportunities; formulation and application of human resource policies and rules; facility and service accessibility; and discipline and termination.

3.5 Appointments

The Board of Library Trustees appoint the Library Director. The Library Director is responsible for the hiring and appointment of all other Library employees. For all positions, notice of employment is made in writing and states the position to which the applicant is appointed, wages and benefits. Acceptance of employment carries with it an obligation to abide by the terms specified in the offer letter and by the policies, procedures, rules and regulations of the Library.

Immediate family members will not be appointed within the same line of supervision, subject to any applicable legal provisions. The appointment of immediate family members of Library Trustees, Library Director, or Assistant Director is prohibited. The term “immediate family member” includes the following for the purposes of this policy:

Grandparent, grandparent-in-law, brother, sister, brother-in-law, sister-in-law, daughter- in-law, son-in-law, father, father-in-law, mother, mother-in-law, spouse, domestic partner, child, stepchild, foster child, grandchild, ward, stepmother, stepfather, stepbrother, stepsister, a legal guardian or other person who stands in place of a parent, aunt, uncle, cousin, niece, and nephew, as well as any relative residing at the employee's address and requiring the care and attention of the employee.

3.6 Recruitment and Hiring

The Downers Grove Public Library provides equal employment opportunity to all applicants on the basis of demonstrated ability, experience, training, and potential. All recruitment shall be conducted in an ethical, professional, and nondiscriminatory manner. Notice of position openings may be posted internally, as well as any external locations deemed appropriate by library administration. The Library reserves the right not to post a particular opening. The Director may reassign staff without posting a vacancy if it is deemed to be in the best interest of the Library. The Director may also reassign staff or eliminate positions, due to financial considerations, changes in library services, or the adoption of new methods.

Individuals whose education and experience do not meet the minimum requirements as set forth in the job description will not be considered.

The Library abides by state and federal laws regulating the hiring of minors (person under 18 years of age). A minor age 14 or 15 may work at the Library outside of school hours and during school vacations based on a valid work permit.

The Library complies with all applicable state and federal laws in its hiring practices, including, but not limited to: Equal Employment Opportunity, Nondiscrimination and Anti-Harassment, Americans with Disabilities Act, and the Immigration Reform and Control Act.

3.7 Pre-Employment Testing and Criminal Background Checks

All new hires are conditional and subject to pre-employment testing, at the Library’s expense. Employment is dependent upon satisfactory completion of the pre-employment testing, including a criminal background check. The criminal background check will be in accordance with state and federal laws. Refusal to submit to and/or failing a criminal background check will remove the employment candidate from consideration for hire with the Library. A background check shall not be required for transfers or promotions of current employees. Having a criminal history will not

automatically preclude employment. The nature of the offense and its relevance to the particular work assignment will be considered on a case-by-case basis.

3.8 Immigration Compliance

Downers Grove Public Library is committed to employing only United States citizens and aliens who are authorized to work in the United States. The library does not discriminate on the basis of citizenship or national origin. In compliance with the Immigration Reform and Control Act of 1986, each new employee, as a condition of employment, must complete the Employment Eligibility Verification Form I-9 and present documentation establishing identity and employment eligibility. Former employees who are rehired must also complete the form if they have not completed an I-9 with Downers Grove Public Library within the past three years or if their previous I-9 is no longer retained or valid. Employees who have a work authorization that expires will need to provide an updated work authorization. Employees who fail to provide proof of their renewed authorization to work prior to the expiration of the authorization documented on their Form I-9 are subject to immediate suspension without pay or termination.

3.9 Introductory Period

During the initial 60-day period of employment, the employee is not entitled to use vacation, sick leave, or personal days. Vacation, sick, and personal day hours will be recorded and will accrue during this period. Exceptions for use of leave during the introductory period may be made with the approval of the Library Director. If termination occurs before the end of the 60 day period, the employee will be paid for all vacation time which has been accrued. Sick or personal time accrued will not be paid.

3.10 Employee Classifications

Full time employees are those who work a standard 7.5 hour work day and a weekly average of 37.5 hours.

Part-time employees are those who work a weekly average of less than 37.5 hours.

Temporary employees are those who work over a designated, predetermined period of time, usually not to exceed six months.

Substitute employees are those who have resigned/retired from their Library jobs, but are still on the payroll. Substitutes fill-in for staff as necessary (maternity leaves, other types of leaves, illnesses, etc.). At the discretion of the Library Director and Manager, substitute employees may be hired from outside the library.

Exempt employees are classified as exempt under the Fair Labor Standards Act and are not entitled to overtime pay.

Non-exempt employees are classified as non-exempt under the Fair Labor Standards Act. Non-exempt employees who work in excess of 40 hours per week receive compensation at a rate of one and one-half times the regular rate of pay.

3.11 Employee Handbook

Employee Handbook provides procedures to apply the Personnel Policy to the day-to-day library work environment. Procedures contained in the Employee Handbook not directly impacted by Library policy may be changed or updated at the discretion of the Library Director. Departmental manuals may be changed or updated at the discretion of the Department Manager. Upon receipt and review of the Employee Handbook, the Employee Acknowledgement Form contained therein must be signed by all new employees.

3.12 Employee Code of Conduct

Employees of the Library shall adhere to the policies and procedures contained in the current Employee Handbook, Policy Manual and departmental manuals. This includes, but is not limited to:

- Customer Service

  Employees and volunteers are to adhere to the Culture Code, Customer Service Promise, and customer service expectations contained in the Employee Handbook for all interactions in the workplace and when representing the Library. Employees shall give the same standard of service to all co-workers and patrons regardless of sex, race, creed, age or national origin; and handle all contact with the public in a friendly, professional and courteous manner.
- Patron Confidentiality and Professional Ethics

  The Library abides by the Illinois Library Records Confidentiality Act (P.A. 83-179). All employees shall honor the provisions of this Act when dealing with patrons and his/her registration, circulation and other confidential information. Employees of the Library shall comply with the *ALA Statement of Professional Ethics* and the Library's ethics policies.
- Personal Appearance

  Employees and volunteers are expected to dress in neat and clean clothes which are appropriate for the position and wear a name tag while working. Inappropriate dress may cause the immediate supervisor to send the employee home to change. Continued inappropriate dress may result in disciplinary action, up to and including termination.
- Trustee/Employee Relations

  Trustees are not to be contacted by employees with any Library issues. Doing so will result in disciplinary action. Employees should discuss any problems or concerns with his/her supervisor and/or follow the chain of command.

  <u>Exceptions to this policy may be made in the following situations</u>:

  1. if the Library Director is not available in the event of an emergency
  2. to contact the Board President in accordance with the Internal Complaint section of this policy

3. for joint Trustee/employee committee work
4. to speak as a member of the public at an open meeting of the Board of Library Trustees

Newly hired employees receive an orientation that includes: the operations, policies, and practices of the Library, the current Employee Handbook, a tour of the Library, and any safety procedures appropriate to the newly hired employee's position.

3.13 Reasonable Accommodations
The Downers Grove Public Library supports the Illinois Human Rights Act, Illinois Pregnancy Accommodation Act, and the Americans with Disabilities Act. The Library provides reasonable accommodations for pregnant employees and qualified individuals with disabilities in the workplace unless such accommodations would present an undue hardship for the Library. Reasonable accommodations apply to all covered employees and include, but are not limited to: hiring practices, job placement, training, pay practices, promotion and demotion policies, and layoff and termination procedures. The employee should contact his or her supervisor or the Assistant Director for further clarification regarding the library's policy on reasonable accommodations or to request a reasonable accommodation in the workplace.

3.14 Employee Privacy
The Library conducts its business in such a way that the rights and privacy of all employees are respected. Administrative employees will request, use, and retain only that personal information about employees which is required for business or legal reasons and shall protect and preserve the confidentiality of all personal information in its records and files. Personal information will not be released to outside sources without the employee's written approval. Exceptions are limited to simple employment verification and fulfillment of legal requirements, which includes the publishing of salaries and compensation. The Library also recognizes its duty to protect the privacy of sources of information contained in an employee's personnel file.

The Library requires each employee to follow Library standards concerning the confidentiality of any personal information about other employees. Violation of this principle is cause for termination.

The Library reserves the right to search any employee's office, desk, file, locker, or any other area or article on the premises. Desks, cabinets and other storage devices, as well as office space and office equipment, remain the property of the Library and are issued for the use of employees only during his/her employment. The Library Director or a specified agent may conduct an inspection of these areas or any articles found within them at any time with or without prior notice and with or without cause.

3.15 Payment of Wages

Employee wages shall be determined from the appropriate pay grade on the Salary Schedule. Wages shall be paid to all employees bi-weekly. Overtime payment, which is included with the non-exempt employee's base wage payment, is also paid bi-weekly with such payment covering hours worked in the prior bi-weekly period. Employees may be paid by check or through direct deposit of funds to either a savings and/or checking account at his or her bank of choice. Payments other than on authorized paydays and advances in pay are not permitted. Terminated employees receive his or her final paycheck on the first regularly scheduled payday following the date of termination. The final pay stub will be mailed to the employee. Any accrued vacation leave will be added to the final check.

3.16 Deductions from Pay

The Library will not take any improper pay deductions that would be in violation of the Fair Labor Standards Act, its regulations [specifically Section 541.602(a)] or any relevant state law or local ordinance. Any employee whose pay is improperly deducted shall be reimbursed no later than the next pay period after the improper deduction is communicated to Library Administration.

3.17 Work Day, Work Week, and Work Year

Full-time employees work an average of 37.5 hours per week, normally consisting of five 7.5 hour work days. For the purpose of determining pay and number of hours worked, the work week runs from Sunday through Saturday. Work schedules will include evening hours and work on Saturdays and Sundays as needed by each department. The Library's fiscal year ("work year") begins January 1 and ends December 31.

3.18 Scheduling and Attendance

Employees are expected at work on all scheduled work days and during all scheduled work hours. Employees are expected to report to work on time.

The Library requires supporting documentation, such as a doctor's note, be furnished in connection with any absence of 4 consecutive days or more.

Failure to comply with these expectations according to established procedures will result in disciplinary action up to and including termination. Unreported or excessive absences, tardiness, or abuse of sick leave will lead to disciplinary action, up to and including termination.

Three consecutive days of absence without notice to the Library constitutes job abandonment; thus, the Library will consider employees who are absent for three days without notice to have voluntarily separated from the Library.

3.19 Time Records

The attendance of all employees is recorded by written time records. Attendance records are Library records and subject to applicable laws governing such records. No employee may maintain another employee's time record. Once an employee signs in, work is to commence immediately. Failure to do so is considered falsification of time records and may result in discipline, up to and including termination.

3.20 Overtime
Non-exempt employees must have supervisory authorization prior to working overtime. Working unauthorized overtime is prohibited and will result in disciplinary action, up to and including termination. Overtime is paid only after a non-exempt employee has worked more than forty (40) hours during the work week. Holiday, vacation, personal, and sick time do not count as hours worked for purposes of overtime. All overtime is paid at one and one-half the employee's regular hourly rate.

Exempt employees are not entitled to overtime pay or compensatory time. However, the Library recognizes there may be situations where a department experiences extraordinary increases in work demand and/or where an exempt employee must commit exceptional time and effort beyond the employee's usual work schedule. In such situations, managers may extend the opportunity for scheduling flexibility at other times that are mutually agreeable between the employee and the manager and which do not negatively impact the operation of the Library. Scheduling flexibility is just that— flexibility—and has no specific time or hour implications, entitlements, or tracking.

3.21 Compensation for Work on Sunday
Part-time non-exempt employees shall receive monetary compensation for work on Sunday equal to one and one half times their normal pay.

Full-time non-exempt staff shall receive bonus time off for work on Sunday equal to one and one half times the hours they worked. Full-time non-exempt employees must use this Sunday bonus time during the four-week period in which the Sunday is worked.

Exempt employees' hours of work on Sunday are calculated at one and one half times actual hours worked.

3.22 Meal and Rest Breaks
The normal workday for full-time employees is 7.5 hours with a 30-minute, unpaid lunch period. If an employee works between 5 and 7.5 hours in a day, he or she may take a 30-minute, unpaid meal period. If an employee works 7.5 hours or more in a day, he or she must take a 30-minute, unpaid meal period. Exceptions to this policy may be made for exempt employees. Meal period times are set at the discretion of the immediate supervisor.

Staff members may request one 15-minute paid rest break for each continuous 4 hours worked. Break time is considered work time and employees are considered “on call” during breaks. Breaks should never be taken at the expense of service to the public. Rest breaks shall not be taken in conjunction with or instead of regular meal periods or at the beginning or end of a work shift without prior supervisory authorization. Rest breaks are not mandated by law. Lost time may not be made up by skipping meals or rest periods. A 15-minute rest break is a privilege and not a guaranteed right. Employees will be expected to forgo the rest break if, due to personnel shortages or other unusual conditions, patron service will be affected.

3.23 Use of Library Equipment

It is the policy of the Library to provide or contract for the communication services and equipment necessary to promote the efficient conduct of business. All business equipment, electronic and telephone communications systems, and all communications and stored information transmitted, received, or contained in the Library’s information systems are Library property and are to be used primarily for job-related purposes during working time. To ensure the proper use of communications systems and business equipment, the Library may monitor the use of these systems and equipment from time to time. When using the Library’s business equipment, employees should note the following:

- Electronic systems are owned/leased and maintained by the Library and electronic communications are the sole property of the Library. Excessive personal use of electronic systems or distribution of personal messages by employees during working time is prohibited. Personal software or messages shall not be installed or stored on the Library’s equipment unless prior approval is obtained. In general, Library employees may use Library equipment, such as portable tablet devices, for personal as well as Library business, with the understanding that such use advances employee skills and knowledge. No expectation of employee privacy applies to this use.
- Employees are prohibited from using codes, accessing files, or retrieving any stored communication without prior authorization.
- The use of personal passwords, assigned to the employee, is not grounds for an employee to claim privacy rights in the electronic or communications systems. The Library reserves the right to override personal passwords. Employees may be required to disclose passwords or codes to the Library to allow access to the systems.
- In order to maintain network and information security, the sharing or misuse of passwords is prohibited. Employees are responsible for protecting the confidentiality of their passwords. Passwords should not be written down or left in places that they are accessible to others.
- Likewise, employees are prohibited from bringing unauthorized electronic communications equipment to work to use with Library-provided electronic communications equipment and/or from accessing Library systems with their devices absent explicit permission from the Library Director. Such prohibited equipment includes but is not limited to: any type of external computer drives,

such as flash drives, to save information from computer drives, and personal laptops and other wireless communications devices. Using such unauthorized equipment with Library-provided electronic communications equipment and/or accessing Library systems without permission is considered to be theft of the Library's intellectual property.

- Employees who create a Library profile/email account on their personal devices without permission (or who refuse to delete their Library profile/email account on their personal devices when asked to do so) will automatically have their devices reset to factory default by the Library. This setting will delete all Library information from their devices, but will also delete any and all personal information (including, but not limited to, apps, contacts, pictures, videos, etc.) as well.
- The Library will, or reserves the right to, monitor the use of electronic systems and to review or inspect all material stored therein. No communications are guaranteed to be private or confidential.
- The Library's prohibition against sexual, racial, and other forms of harassment is extended to include the use of electronic and telecommunications systems. Harassing, vulgar, obscene, or threatening communications are strictly prohibited, as are sexually oriented messages or images. Employees who receive email or other information on their computers which they believe violate this policy should immediately report this activity to their supervisor or the Assistant Director.
- Professional discretion should be used in the exchange of privileged or confidential material, such as, but not limited to, trade secrets or attorney-client communications, and should not be exchanged haphazardly by email, facsimiles, or other means of communication.
- The Library requires all staff to respect all laws governing copyright, fair use of copyrighted material owned by others, trademarks, and other intellectual property, including the Library's own copyrights, trademarks, and brands.
- Electronic messages are subject to disclosure under the Illinois Freedom of Information Act. Messages believed to have been erased or deleted can frequently be retrieved by systems experts. These conditions require that employees use the systems only in an appropriate manner.
- Employees should exercise care so that no personal correspondence appears to be an official communication of the Library. Employees may not utilize Library stationary or postage for personal letters.

3.23.1 Telephones and Texting

While at work, employees are to exercise the same discretion in using personal cellular phones as they do for Library phones. Employees are expected to make personal calls on non- work time when possible and to ensure that friends and family members are aware of the Library's policy. Employees should not use their personal cell phones in public areas, unless permission from a supervisor is given for circumstances demanding immediate attention.

The Library requires cell phone safety when operating a motor vehicle for Library business. If the employee finds that it is absolutely necessary to utilize a cellular phone while driving, the following must be observed:

- Employees may only use a cellular phone while driving if they are utilizing a hands-free device (such as a headset) or are using the phone in a voice activated mode.
- Employees must not compose, send, or read electronic messages while operating a motor vehicle.

3.23.2 Social Media

Social Media is defined as: blogs, other types of self-published online journals, and collaborative Web-based discussion forums including, but not limited to: LinkedIn, Facebook, Pinterest, and Twitter.

I. General Rules and Guidelines

The following rules apply to the use of social media, whether such use is for the Library during working time, outside the workplace, or during working time while using Library- owned equipment.

- Employees are prohibited from discussing confidential Library matters through the use of social media such as the Library's marketing lists, patron account information, and other proprietary and nonpublic Library information.
- Employees may not use social media to harass, threaten, bully, or discriminate against co-workers, managers, patrons, vendors or suppliers, any organizations associated or doing business with the Library, or any members of the public, including Web site visitors who post comments. The Library's anti-harassment and EEO policies apply to use of social media in the workplace.
- This policy is not intended, nor shall it be applied, to restrict employees from discussing their wages, hours, and working conditions with co-workers.

II. Library-Sponsored Social Media

Library-sponsored social media is used to: convey information about the Library's facilities and services; advise the public about upcoming events; obtain patron feedback, exchange ideas or trade insights about industry trends; reach out to potential new markets; issue or respond to breaking news, or respond to negative publicity; and brainstorm with employees and patrons.

All such Library-related social media is subject to the following rules, in addition to rules set forth above:

- Only employees designated and authorized by the Library may prepare content for or delete, edit, or otherwise modify content on Library-sponsored social media.
- Library employees must respect copyright, trademark, and similar laws

and use such protected information in compliance with applicable legal standards.

- Designated employees are responsible for ensuring that the Library-sponsored social media conform to all applicable Library rules. These employees are authorized to remove immediately and without advance warning any content, including offensive content such as sexually explicit material, obscenities, profanity, and/or material that violates the Library's EEO and/or anti-harassment policies.
- Employees who want to post comments in response to content must identify themselves as employees.

3.23.3 Staff Bulletin Boards

Library bulletin boards in staff areas are used to communicate official government information on EEO, wage and hour, health and safety, and other issues. They are also used to communicate information regarding Library policy and its business and announcements, including but not limited to: job postings, safety rules, health items, benefit programs, and notices regarding special events. Employees may not remove official postings from bulletin boards. Employees who wish to post personal notices (e.g., sale of a car, rental of an apartment) on the Library bulletin board in the staff lounge may do so as space and time permit. The employee posting the material is responsible for its timely removal. Administration staff are responsible for keeping the bulletin boards up-to-date and attractive and may remove postings as necessary.

3.23.4 Violations and Disciplinary Action

The Library will investigate and respond to all reports of violations of the Library's policies, procedures, rules and regulations. Employees are urged to report any violations of this policy to their supervisor or Department Head. A violation of this policy may result in discipline up to and including termination of employment.

3.24 Library Information and Property

No Library-related information or property may be removed from the Library's premises except in the ordinary course of performing duties on behalf of the Library. This includes without limitation: documents, files, records, computer files, equipment, office supplies or similar materials. Violation of this policy is a serious offense and will result in appropriate disciplinary action, up to and including termination.

In addition, when an employee leaves the employ of the Library, the employee must return to the Library all Library-related information and property that they have in his or her possession, including without limitation: documents, files, records, manuals, information stored on a personal computer or on any external storage device, supplies, and equipment or office supplies.

3.25 Driver's License and Proof of Insurance

All employees who drive a motor vehicle in the course of Library business must present a valid, current driver's license and proof of personal automobile insurance to the Administrative Office on an annual basis.

3.26 Meetings, Workshops, and Conferences
The Library will pay the full cost for employees, both full- and part-time, to attend job-related meetings and workshops as assigned or approved by Library Administration. Budgetary constraints may limit attendance.

Employees who are required to travel for Library-related business will be reimbursed for actual mileage incurred above the employee's regular commute to and from the Library. In other words, mileage reimbursement will be given only when the distance to an alternate location is greater than the employee's normal work commute. When using a private vehicle for Library business, the employee assumes liability for the vehicle. All employees who use their personal vehicles for Library business must have a current driver's license and vehicle liability insurance in the minimum amounts required by state law. Otherwise, the vehicle is not authorized for Library use. Mileage reimbursement must be submitted to the supervisor within 90 days.

Within budgetary constraints, approved travel to Library meetings and conferences, employees, Library Director, and Trustees, will be reimbursed reasonable airline or train fares, mileage, shuttles, and parking. When an overnight stay is required or advisable for employees, the Library Director or Trustees, usual and customary rates will be reimbursed. Accompanying spouses or non-staff must pay additional expenses. Reimbursement for automobile mileage will be based on the current rate allowed by the Internal Revenue Service. Meal reimbursement will be based on the current per diem rates allowed by the Internal Revenue Service.

A Library-issued credit card may be used to reserve and pay for hotel or travel expenses for approved meeting and conference attendance. It is the responsibility of the employee to keep all receipts for travel, hotel and meals to be turned in to the Administration Office within 10 days of return from the trip. No reimbursement will be made without receipts to document the expense.

3.27 Membership in Professional Organizations
Membership in the American Library Association (ALA) and Illinois Library Association (ILA) shall be paid in full by the Library for the Library Director, members of the Board of Library Trustees who wish to participate, and full-time professional staff. Individual memberships in other library-related organizations or for other employees may be paid at the discretion of the Library Director.

All professional membership dues are paid dependent on budgetary considerations and may not be renewed as financial constraints of the Library warrant.

3.28 Emergency Closings
In the event the Library is closed due to an emergency such as heavy snow, power failure, etc., all staff will be paid for their regularly scheduled hours.

In the event of a closing that may be only temporary, staff who are being paid for closed times will be considered to be "on call" and are expected to return to the Library for the remainder of their scheduled work day should conditions allow the Library to reopen. If an employee chooses not to come to work or leaves early due to inclement weather when the Library remains open or reopens, the employee may choose to use any remaining vacation or personal time or take the time off without pay.

3.29 Smoke-Free Illinois Act
The Smoke-Free Illinois Act prohibits smoking in public libraries. Smoking is not permitted in any area of the building, or within 15 feet of any entrance, exit, window that opens, or ventilation intake. This policy also applies to the use of smokeless tobacco, herbal products, e-cigarettes, vaporizers, and other electronic smoking devices.

3.30 Employment Verification and Letters of Reference
When contacted to verify employment, the Administrative Office will confirm that an employee works for the Library, the position held, the dates of employment, and the rate of pay. No other reference will be provided concerning an employee unless a signed release form is provided by the employee. An employee may request in writing, on the Notice of Separation or other appropriate release form, that their supervisor write a reference to be kept in their personnel file and released to those requesting a performance-related reference. This is the only performance-related reference that will be given by the library.

3.31 Contest and Program Prizes
Members of the Board of Library Trustees and employees shall not be eligible to win any prize or award that may be given in any program or contest sponsored by the Library with the exception of participation and completion prizes or awards given to all residents who participate in a program.

3.32 Solicitation and Fundraising for Outside Organizations
Employees are encouraged to participate in community events, including fundraisers in support of worthy causes and support of local businesses, including recommendation of products and services to fellow employees. The Library does not sponsor or contribute to individual employees' fundraising efforts for organizations outside the Library or endorse any local business.

3.33 Violence in the Workplace
Acts or threats of violence will not be tolerated. Any instances of violence must be reported immediately. All complaints will be fully investigated. In order to maintain workplace safety, the Library may suspend employees with or without pay pending an investigation. The Library will promptly respond to any incident or suggestion of violence. Violation of this policy will result in disciplinary action, up to and including immediate termination and possible legal action.

Employees are expected to refrain from fighting or other conduct that may be dangerous to others. Firearms, weapons and other dangerous or hazardous devices or substances are prohibited from the Library premises.

3.34 Reference Checks
To ensure that individuals who join Downers Grove Public Library are well qualified and have a strong potential to be productive and successful, before extending an employment offer, the Downers Grove Public Library will check references and verify application.

3.35 Performance Evaluations
Performance evaluations are conducted at least annually, within a time frame set by the Director. New employees and employees who have changed jobs are usually reviewed at or before the completion of three months of employment, at the completion of six months of employment, at the completion of twelve months of employment, and then during the regular evaluation period. A Manager may conduct more frequent performance evaluations as appropriate.

The goals of performance evaluation include the following:
- To ensure that the employee understands his or her work assignments and the level of performance required
- To give the employee feedback on the quality of his or her work
- To identify problems in work and develop a plan for correcting those problems
- To recognize exceptional performance and to provide the administration with a tool for rewarding an employee's job performance
- To provide information for making decisions related to continued employment
- To set appropriate goals for the employee to accomplish in the coming year

One of the functions of the evaluation process is to document employee performance and problems and provide a developmental plan for resolving such problems. Failure on the part of the employee to follow the developmental plan could result in further disciplinary action, including termination.

Completed performance evaluation forms are signed by the employee and the supervisor. The employee's signature indicates that the evaluation was discussed with

the employee and does not necessarily indicate that the employee agrees with the evaluation. The employee has the opportunity to make comments on the performance evaluation form concerning the evaluation of his or her performance. Performance evaluations, along with the other contents of the personnel file, may be reviewed by the employee.

3.36 Personnel File Review
Personnel files are the property of the Library. Only Library Administration personnel with a legitimate reason to review information in a file are allowed to do so. Employees in Illinois have a right to review and copy parts of his/her personnel records, as well as attach his/her own position statement regarding disputed personnel matters concerning themselves. All requests must be made in writing and inspections are permitted within 7 working days of the request. Photocopying permitted portions of his or her personnel records is at a cost to the employee. The employee will inspect the personnel records in the Administration Office at a time mutually convenient to the Library and employee. The employee may not remove any part of his or her record from the file and may not remove any part of the record from the Administration Office.

3.37 Internal Complaints
Employees having a complaint arising out of his or her employment by the Library will have the right to appeal first to his or her supervisor. If an employee feels his or her concern has not received due consideration, he or she should submit his or her written complaint to Assistant Director in a timely manner. The matter will then be discussed with the Library Director and a written response will be given to the employee.

If the employee still feels the matter is not satisfactorily handled, the employee may then request, in writing, that the Library Director submit the matter to the Board of Library Trustees. The Board of Library Trustees shall investigate the situation. In all cases, this investigation may include personally interviewing the employee concerned, the supervisor, and the Library Director. After completing the investigation, action may be taken by the Board of Library Trustees at the next regular meeting. Personnel matters may be discussed in closed session at the discretion of the Trustees. The decision of the Board of Library Trustees is final.

If a complaint involves the performance of the Library Director, the Board President will be the first contact to resolve the problem. The Board Officers will investigate and submit a recommendation to the Board of Library Trustees for action. The decision of the Board of Library Trustees is final.

3.38 Progressive Discipline and Termination
The purpose of disciplinary action is to correct the problem, prevent reoccurrence and prepare the employee for satisfactory performance. Violations of the law, policies, rules, regulations and procedures of the Library may be cause for disciplinary action.

Should an employee's performance, work habits, overall attitude, conduct, or demeanor become unsatisfactory in the judgment of the supervisor or Library Director, based on violations of any Library policies, rules, regulations, and procedures, the employee will be subject to disciplinary action as follows:

- Step One - Oral Warning
- Step Two - Written Warning
- Step Three - Final Written Warning or Administrative Leave
- Step Four - Discharge

The Library is not required to go through the entire disciplinary action process. Discipline may begin at any step, including termination, dependent upon the severity of the incident or infraction. The progressive disciplinary steps and the failure to follow the steps in every situation do not in any way create a contractual right to continued employment.

The Library reserves the right to investigate the infraction for which an employee may face discharge. In this case, the Library may place the employee on administrative leave, with or without pay, pending the investigation. The objective of this administrative leave will be to determine if discharge is the proper decision. Following the investigation, if the Library decides not to discharge the employee, the employee will be reinstated, with or without back pay, depending on the circumstances.

Any violation of the following may result in the immediate termination of the employee:

- Refusal to obey a direct, reasonable order that pertains to an employee's position as described,
- Deliberate destruction or damage to Library property,
- Falsification of any kind or type of Library records, including time records or the completion of time records for another employee,
- Violating the Library's Drug and Alcohol Use policy,
- Theft of Library property or the property of a co-worker,
- Unlawful activities on Library premises. This includes gambling, the use of controlled substances, the possession and/or use of weapons, etc.,
- Fraudulent or indecent actions on Library premises,
- Failure to return from an absence on the agreed upon date,
- Failure to protect confidential Library or patron information,
- Stopping work before the specified end of the workday without the approval of a supervisor,
- Failure to accurately account for time worked and adhere to scheduled hours of work,
- Excessive absenteeism or tardiness,
- Smoking in prohibited places,
- Posting or removing official notices on or from staff bulletin boards without prior approval of Library Administration,

- Obscene, abusive, inflammatory or derogatory language which includes the spreading of rumors and/or malicious gossip,
- Improper usage of all Library-owned equipment or computer technology including internet, e-mail or cell phones,
- Fighting or violence in the workplace (threatening and/or coercing co-workers during working hours),
- Outside employment which conflicts with Library interests or inhibits the employee's ability to function effectively,
- Negligent actions that resulted in injury to co-workers or damage to Library property, and/or
- Failure to properly supervise or account for Library property under the employee's principle control.

Other violations, not listed here, may also result in immediate termination of an employee. Such violations include, but are not limited to, actions which directly endanger the health and/or safety of any person and which significantly disrupts the orderly performance of work.

The Library strives to ensure fair treatment of all employees and make certain that disciplinary actions are prompt, uniform, and impartial.

All terminations must be authorized by the Library Director.

3.39 Anti-Discrimination and Anti-Harassment
It is the policy of the Downers Grove Public Library to maintain a work environment free from all forms of discrimination and harassment. In keeping with this commitment, the library will not tolerate discrimination against or harassment of library employees by anyone, including any supervisor, co-worker, vendor, contractor, member of the public, or other regular visitor of the library. The library takes allegations of discrimination and harassment seriously and will respond promptly to complaints. Any employee found to be in violation of this policy will be subject to disciplinary action, up to and including termination.

3.39.1 Definition of Discrimination
Discrimination consists of employment actions taken against an individual based on a characteristic protected by law. In other words, discrimination occurs when an individual is treated differently, unequally, and usually negatively because the individual is a member of a protected group.

3.39.2 Definition of Harassment
Harassment consists of unwelcome conduct, whether verbal, physical, or visual, that is based on a characteristic protected by law, such as sex, race, color, ancestry, national origin, citizenship status, religion, age, disability, marital status, sexual

orientation, gender identity, pregnancy, military or veteran status, genetic information, order of protection status, or any other category protected by law. The library will not tolerate harassing conduct that affects employment conditions or job benefits, that interferes unreasonably with an individual's work performance, or that creates an intimidating, hostile, or offensive work environment.

The conduct forbidden by this policy specifically includes, but is not limited to: (a) epithets, slurs, negative stereotypes, or intimidating acts that are based on a person's protected status; and (b) written or graphic material circulated within or posted within the workplace that shows hostility toward a person because of his or her protected status.

3.39.3 Definition of Sexual Harassment

Sexual harassment consists of any unwelcome sexual advances, requests for sexual favors, or any verbal or physical conduct of a sexual nature when made to an employee where:

- Submission to such conduct is made explicitly or implicitly a term or condition of employment

- Submission to or rejection of such conduct by an individual is used as the basis for any employment decision affecting such individual

- Such conduct has the purpose or effect of substantially interfering with an individual's work performance or creating an intimidating, hostile, or offensive work environment

Sexual harassment, as defined above, may include, but is not limited to:

- Uninvited sex-oriented verbal "kidding" or demeaning sexual innuendos, leers, gestures, teasing, sexually explicit or obscene jokes, remarks or questions of a sexual nature

- Graphic or suggestive comments about an individual's dress or body

- Displaying sexually explicit objects, photographs, writings, or drawings

- Unwelcome touching, such as patting, pinching, or constant brushing against another's body

- Suggesting or demanding sexual involvement of another employee whether or not such suggestion or demand is accompanied by implicit or explicit threats concerning one's employment status or similar personal concerns

Even if two or more employees are engaging in consensual conduct, such conduct could constitute harassment of or discrimination against another employee who witnesses or overhears such conduct.

3.39.4 Reporting Harassment

All Library employees are responsible to help ensure that harassment does not occur and/or is not tolerated. Any employee who believes that he or she has been subjected to sexual or other types of harassment, or who has witnessed harassment, should immediately submit a complaint to his or her supervisor, any other manager or supervisor, or the Assistant Director. In the event the Assistant Director is the alleged harasser, the complaint may be submitted directly to the Director or any supervisor. In the event the Director is the alleged harasser, the complaint may be submitted to the President of the Library Board. If a manager or supervisor receives a complaint of harassment or discrimination directly from an employee, or becomes aware of such conduct, the complaint shall be immediately reported to the Assistant Director.

The Assistant Director shall promptly investigate all complaints and make all reasonable efforts to resolve the matter informally. These efforts may include, but are not limited to, convening conferences with the complainant and/or the accused harasser/discriminator to discuss the complaint and the results of the investigation. If the complainant or the accused is not satisfied with the disposition of the investigation, he or she may submit in writing an appeal to the Director or his designee, who will review the investigation report and make a final decision. At the Director's option, he or his designee may conduct further investigation, if necessary.

3.39.5 Discipline

If the complaint is found to be valid, appropriate disciplinary action will be taken against the perpetrator. Such disciplinary action could include termination of employment. (The Library's disciplinary procedures are listed in section 3.38.)

3.39.6 Retaliation

Reporting harassment, assisting in making a complaint, cooperating in an investigation of harassment, or otherwise engaging in conduct protected by the Illinois Whistleblower Act will not reflect adversely upon an individual's status or affect future employment. Any employee who retaliates against another for exercising his or her rights under this policy shall be subject to discipline, up to and including discharge. The rights to confidentiality, both of the complainant and of the accused, will be respected consistent with the Library's legal obligations and with the necessity to investigate allegations of misconduct and to take corrective action when this conduct has occurred.

It is hoped that most harassment complaints and incidents can be resolved within the Library. However, an employee has the right to contact the Illinois Department of Human Rights at 800-662-3942, the Illinois Human Rights Commission at 312-814-6269, or the Equal Employment Opportunity Commission at 800-669-4000 about filing a formal complaint.

The filing of a complaint under the procedures described herein shall not limit, extend, replace, or delay the right of any person to file a similar complaint or charge with any appropriate local, state, or federal agency or court.

3.39.7 False Reporting
Given the nature of this type of discrimination, the Library recognizes that false accusations of sexual harassment can have serious effects on innocent individuals. Individuals found to file a knowingly false report will be subject to appropriate disciplinary action. Such disciplinary action could include termination of employment. (The Library's disciplinary procedures are listed in section 3.38.)

3.40 Alcohol and Drug-Free Workplace
The library provides a drug and alcohol free workplace. The unlawful manufacturing, distribution, dispensation, possession, or use of a controlled substance on library premises or while conducting library business is absolutely prohibited. Violations of this policy will result in disciplinary termination of employment. Violations may also have legal consequences.

3.41 State Officials and Employees Ethics Act
Downers Grove Public Library officers and employees are prohibited from offering or accepting gifts and engaging in political activities as prohibited by the Illinois State Officials and Employees Ethics Act (5 ILCS 430/1-1 et seq).

3.42 Bloodborne Pathogens
While normal Library operations are not likely to involve circumstances exposing employees or users to bloodborne pathogens, the Library complies with Illinois Department of Labor regulations and therefore the federal Occupational Safety and Health Administration regulations relating to occupational exposures to bloodborne pathogens which have been incorporated by administrative actions.

3.42.1 Exposure Determination
No particular job classification of the Library has occupational exposure (meaning “reasonably anticipated…contact with blood or other potentially infectious materials that may result from the performance of an employee’s duties”), however, emergencies may occur with staff or patrons, particularly youth or elderly patrons, to which Library employees in all classifications may be called upon to respond with

assistance. Or emergencies with “out of control” individuals (e.g. biting, spitting, etc.) could present an individual threat.

3.42.2 Universal Precautions

All potential circumstances of exposure must be taken into account by the Library and its employees to protect against exposures. Hepatitis B (HBV), human immunodeficiency virus (HIV), and other bloodborne pathogens found in human blood and other body fluids cause life-threatening diseases. In emergency or other such circumstances, when contact with blood or other potentially infectious materials may result, the Library’s approach to infection control requires all human blood and body fluids to be treated as if known to be infectious for HIV, HBV, and other bloodborne pathogens. Engineering and work practice controls shall be used to eliminate or minimize employee exposures, and if a possibility of exposure remains, personal protective equipment shall also be used.

3.42.3 Exposure Control Plan

At any time within the Library environment that human blood, human body fluids, or other potentially infectious materials are presented, the area contaminated shall be immediately cordoned off and quarantined, even if the entire Library must be closed to accomplish this completely. Personal protection clothing, such as gloves, gowns, masks, etc., shall be provided and used in the cleanup and safe disposal of contaminated waste such as diapers, blood-tinged materials (e.g. Band-Aids, gauze, cotton, clothing, etc.). If advisable, a professional hazardous/contaminated cleanup firm shall be contacted and retained for complete cleanup and decontamination. The quarantine shall be effective until complete cleanup and disposal is obtained. Hand-washing facilities are provided by the Library and must be used by the employees as soon as feasible, including following the removal of personal protective equipment. A complete record of all incidents, exposures, cleanup, and disposals shall be kept as required by the regulations.

3.42.4 Training and Immunizations

The Library shall provide directly, through state or associational programs, or annual in-service training/educational programs for all affected employees. Any employee who has an occupational exposure shall be offered, at no charge, the hepatitis B vaccine series, in accordance with the regulations. Following the report of an exposure incident, the Library will make immediately available to the exposed employee or employees a confidential medical evaluation and follow-up as provided in the regulations.

3.43 Benefits Disclaimer

Eligible employees of the library are provided with a wide range of benefits. A number of the programs (such as Social Security, workers' compensation, and unemployment insurance) cover all employees in the manner prescribed by law. Eligibility for other

benefits is dependent upon a variety of factors, including employee classification. A Summary Plan Description (SPD) which explains coverage of many of the benefits in greater detail is available. The actual plan documents are the final authority in all matters relating to benefits described in this policy or in the SPD and will govern in the event of any conflict.

Nothing contained in the benefit plans described herein shall be held or construed to create a promise of employment or future benefits, or a binding contract between the Library and its employees, retirees or dependents, for benefits or for any other purpose. All employees shall remain subject to termination or discipline to the same extent as if these plans had not been put into effect.

The Library reserves the right, in its sole and absolute discretion, to amend, modify or terminate, in whole or in part, any or all of the provisions of the benefit plans described herein.

3.44 Insurance Benefits

Health, dental, and vision insurance are available to all Library employees who work 30 or more hours per week and their spouses and dependent children. The Library participates in the Village of Downers Grove group insurance program. Costs of the health insurance premium are shared between the Library and the employee. The amount of each party's share depends on the specific insurance plan selected by the employee. The Village of Downers Grove group insurance program also includes a life insurance policy.

Part-time employees working in IMRF-qualified positions are eligible to participate in the health, dental, and vision insurance program. They must pay the full premium.

Eligible employees who choose not to participate in the health insurance program must provide a written release to be kept in their personnel file.

All coverage and conditions of insurance are determined by the group policy managed by the Village of Downers Grove. Explanation and coordination of benefits is handled by the Village's Human Resources Department.

3.45 Flexible Spending Account

The Library participates in a Flexible Spending Account program for all employees for dependent and medical expenses. This program is managed by the Village of Downers Grove. Annually, each employee must elect to participate and how much, if any, to contribute. Contributions are made through an automatic payroll deduction.

3.46 Illinois Municipal Retirement Fund (IMRF)

The Library participates in the Illinois Municipal Retirement Fund (IMRF) which serves as the Library's supplier of tax-deferred pensions, retirement, long-term disability and death benefits. Employees hired prior to January 18, 1982 at any IMRF employer and working 600 hours or more and employees hired on or after January 19, 1982 working 1,000 hours or more per year are qualified to be members of IMRF and required to contribute at the rate prescribed by law. Employees' required IMRF contributions are automatically deducted from each paycheck and credited to his/her account with IMRF. The IMRF employer contribution rate is also prescribed by law. Payment of the IMRF employer contribution is made monthly, as required. The Downers Grove Public Library has no administrative or fiduciary responsibility for IMRF.

Additional voluntary retirement options are available.

3.47 Workers Compensation
All employees are covered by Workers' Compensation Insurance for work-related injuries. Employees must notify their supervisors immediately when an injury occurs. The employee is required to obtain clearance to work after an injury occurs. Failure to immediately report an accident may result in disciplinary action, up to and including discharge.

3.48 Parking Permits
Downtown Business Employee parking permits provided for all full-time employees and all part-time employees who work weekday daytime hours. Upon leaving the Library's employ, employees are required to return their parking permits to the office. Employees will be charged for lost parking permits.

3.49 Vacation
Vacation time begins accruing on an employee's first day. However, employees may only begin to use their vacation after two months of employment. If a part-time employee becomes a full-time employee, the number of consecutive years worked as a part-time employee will be counted towards the years of service used to determine the rate at which the employee will accrue vacation time. A permitted leave of absence does not qualify as a break in service.

Vacation leave for executive positions (Library Director, Assistant Director) is individually negotiated in conjunction with the setting of the executive's compensation.

Managers and professional MLS employees shall have the following vacation leave schedule:

YEARS OF SERVICE	WEEKS OF VACATION WITH PAY	
1 or more	four	(4)

Other full-time, nonprofessional employees have the following vacation leave schedule:

YEARS OF SERVICE	WEEKS OF VACATION WITH PAY	
1 through 5	two	(2)
Over 5 through 10	three	(3)
Over 10	four	(4)

Part-time employees, working in an IMRF-qualified position, accrue a prorated amount of vacation time based on the average number of hours worked per week the previous calendar year. In their first calendar year of employment, part-time employees accrue a prorated amount of vacation time based on the average number of hours they are authorized to work that year.

YEARS OF SERVICE	WEEKS OF VACATION WITH PAY	
1 through 5	two	(2)
Over 5 through 10	three	(3)
Over 10	four	(4)

Part-time employees, working in non-IMRF-qualified positions, accrue a prorated amount of vacation time based on the average number of hours worked per week the previous calendar year. In their first calendar year of employment, part-time employees accrue a prorated amount of vacation time based on the average number of hours they are authorized to work that year.

YEARS OF SERVICE	WEEKS OF VACATION WITH PAY	
1 through 5	one	(1)
Over 5 through 10	two	(2)
Over 10	three	(3)

Vacation leave may be claimed in hourly segments, but vacation leave payments shall not exceed the normal scheduled workday or workweek. The equivalent of one week's vacation hours may be carried from one year to the next. All other earned but unused vacation time will be lost at the end of the calendar year.

Leave balances will be settled at the conclusion of each year or upon separation from employment. Upon separation if the employee has used more of the advanced leave than he/she was entitled to use, the employee must reimburse the library for this time. If the employee has accrued, unused vacation leave remaining upon separation, the Library will pay out the leave hours. That amount shall be reflected in the employee's final paycheck from the Library.

Holidays falling within a vacation period shall not be charged against an employee's vacation allowance.

Before a leave of absence without pay is granted, employees must have exhausted all his/her earned vacation leave.

When an employee changes status from full-time to part-time or part-time to full-time, the employee may carry over accrued, unused vacation leave.

3.50 Personal Time
Full-time employees are granted 15 paid personal hours on January 1 of each work year. With the advance permission of the department manager, these hours may be taken any time during the year. Personal hours are lost if not used by the end of each work year.

3.51 Holidays
The Library is closed and full-time employees are paid for seven holidays each year. These holidays are:

- New Year's Day
- Memorial Day (Monday observance)
- Independence Day
- Labor Day
- Thanksgiving
- Christmas Eve Day
- Christmas Day

The Library is also closed, but employees are not paid for:

- Easter Sunday
- Sunday before Memorial Day
- After 7:00pm on Friday of Rotary Grove Fest
- After 1:00pm on Saturday of Rotary Grove Fest
- Sunday of Rotary Grove Fest
- Sunday before Labor Day
- After 5:00pm on New Year's Eve

Part-time employees are not paid for holiday closings but may make up hours lost due to the closings. When a paid holiday falls on a weekend, full-time employees will be scheduled for a day off with pay during the week preceding or following the holiday.

3.52 Sick Leave
Sick leave with pay is granted at a rate of 7.5 hours per month for full-time employees up to a maximum of 90 hours per year. Unused sick days are accumulated up to a maximum of 1,800 hours (240 days).

Part-time employees are granted sick leave at the same rate as full-time employees, pro-rated on the actual number of hours worked the previous year. For the first year of

employment, sick leave is prorated on the number of hours authorized for the position. Unused sick leave is accumulated up to a maximum of 1,800 hours.

All new employees may begin using sick leave after two months of employment.

Sick leave accrues on a monthly basis. However, for recordkeeping purposes, on January 1 of each year, employees will be granted the amount of sick leave they would earn if they stayed employed by the Library for the entire upcoming calendar year. Leave balances will be settled at the conclusion of each year or upon separation from employment. Upon separation, if the employee has used more of the advanced leave than he or she was entitled to use, the employee must reimburse the library for this time.

Sick leave may be used only on those days an employee is scheduled to work. Sick leave may be claimed in hourly segments, but sick leave payments shall not exceed the usual number of hours in the employee's scheduled work day or work week. An employee may not be paid for more sick leave than has been earned.

Sick leave shall be granted to an employee only on approval of the supervisor and for the following reasons:

- Illness (including conditions related to pregnancy or childbirth) or injury of the employee
- Illness or injury of a member of the employee's immediate family who requires the care and attendance of the employee (See 3.5 for definition of immediate family.)
- Medical, dental, or optical examinations for treatment of the employee or a member of the immediate family who requires the care and attendance of the employee

A note from the employee’s treating physician, assuring fitness to work, is required prior to returning to work for any absence of 4 or more consecutive days.

Unused sick leave is not paid at the time of termination or retirement. IMRF does give retirees credit for unused sick leave in calculating their years of service.

3.53 Compassionate Leave

Compassionate leave will be granted in the case of the death of a member of the immediate family. Up to 5 days will be granted, depending on the circumstances. Hours scheduled during the leave will be paid. If circumstances require additional time off, accrued vacation time must be used or a written request must be submitted to the Library Director who may extend the leave without pay. Proof of the need for the leave may be required. In special cases where services are postponed or held at a later time, the Library Director may opt to allow the use of compassionate leave to be split up and used as needed to accommodate said arrangements.

Leave for a catastrophic personal emergency involving an employee or a member of their immediate family may also be granted, at the discretion of the Library Director. In all such cases, the Library Director is to be notified at the earliest possible opportunity.

Refer to 3.5 for definition of immediate family.

3.54 Jury or Other Civic Duty
If an employee is required to serve as a juror or under supoena as a witness in a court proceeding, the library will pay the regular salary or hourly wage of the individual upon documentation of the service provided and surrender of jury pay. During periods of such service, the employee is expected to report for work when not actually engaged in court proceedings, as practicable.

3.55 Family or Medical Leave of Absence (FMLA)
Employees may be eligible to take up to 12 weeks of unpaid family/medical leave within a 12 month period and be restored to the same or an equivalent position upon return provided that the employee has worked for the Library for at least 12 months AND worked at least 1250 hours in the last 12 months AND if at least 50 employees are employed by the Library within 75 miles. The “12 month period” is measured as a forward-rolling 12 month period.

3.55.1 Reasons for Leave
If an employee is eligible, the employee may take family/medical leave for any of the following reasons: (1) the birth of a child and in order to care for such child; (2) the placement of a child with the employee for adoption or foster care; (3) to care for a spouse, son, daughter or parent (“covered family member”) with a serious health condition; or (4) because of the employee’s own serious health condition which renders the employee unable to perform the functions of the employee’s position. Leave because of reasons one and two above must be completed within the 12 month period beginning on the date of birth or placement. In addition, spouses employed by the Library who request leave because of reasons one or two or to care for an ill parent may only take a combined aggregate total of 12 weeks leave for such purposes during any 12 month period.

3.55.2 Military Family Leave Entitlement
If an employee is eligible, the employee may use the 12-week FML entitlement to take military family leave. This leave may be used to address certain qualifying exigencies related to the covered active duty or call to covered active duty of a spouse, son, daughter or parent. Qualifying exigencies may include (1) attending certain military events; (2) arranging for alternative childcare; (3) addressing certain financial and legal arrangements; (4) attending certain counseling sessions; (5) addressing issues related to short-notice deployment; (6) spending time with a

covered family member who is resting and recuperating; (7) attending post-deployment briefings; and (8) for certain activities relating to the care of the military member's parent who is incapable of self-care where those activities arise from the military member's covered active duty.

An employee may also be eligible for up to 26 weeks of leave to care for a covered servicemember during a single 12 month period. This single 12 month period begins with the first day the employee takes the leave. A covered servicemember includes: (1) a current member of the Armed Forces, including a member of the National Guard or Reserves, who has a serious injury or illness incurred in the line of duty on active duty that may render the servicemember medically unfit to perform his or her duties for which the servicemember is undergoing medical treatment, recuperation, or therapy or is in outpatient status; or (2) is on the temporary disability retired list; or (3) a covered veteran, meaning one who is undergoing medical treatment, recuperation or therapy for a serious injury or illness and: "(i) was a member of the Armed Forces (including a member of the National Guard or Reserves); (ii) was discharged or released under conditions other than dishonorable; and (iii) was discharged within the five-year period before the eligible employee first takes FMLA military caregiver leave to care for the veteran."

Employees may not be granted a FML leave to gain employment or work elsewhere, including self-employment. If an employee misrepresents facts in order to be granted an FMLA leave, the employee may be subject to immediate termination.

3.55.3 Notice of Leave

If the FML is foreseeable, the employee must give the Library at least 30 days notice in accordance with the usual procedure for requesting a leave of absence. Failure to provide such notice may be grounds for delay of the leave. Where the need for leave is not foreseeable, the employee is expected to notify the Library as soon practicable and, absent unusual circumstances, in accordance with the Library's normal leave procedures.

3.55.4 Medical Certification—Leave for Employee's Own or a Covered Family Member's Serious Health Condition

If the employee is requesting leave because of the employee's own or a family member's serious health condition, the employee and the relevant health care provider must supply appropriate medical certification. The medical certification must be provided within 15 days after it is requested, or as soon as reasonably possible under the circumstances. Failure to provide requested medical certification in a timely manner may result in denial of leave until it is provided. The Library, at its expense, may require an examination by a second health care provider designated by the Library, if it reasonably doubts the medical certification you initially provide. If the second health care provider's opinion conflicts with the original medical

certification, the Library, at its expense, may require a third, mutually agreeable health care provider to conduct an examination and provide a final and binding opinion. The Library may also require medical recertification periodically during the leave and employees may be required to present a fitness for duty verification upon their return to work following a leave for the employee's own illness specifying that the employee is fit to perform the essential functions of the job.

3.55.5 Certification for a Qualifying Exigency

If the employee is requesting leave because of a qualifying exigency arising out of a covered family member's active duty or call to active duty, the employee must supply a copy of the covered military family member's active duty orders or other documentation issued by the military indicating that the covered military member is on active duty or call to active duty (including the dates of the active duty service). The Library may also request additional information pertaining to the leave.

3.55.6 Certification for Servicemember Family Leave

If an employee is requesting leave because of the need to care for a covered servicemember with a serious injury or illness, the Library may require the employee to supply certification completed by an authorized health care provider of the covered servicemember. In addition, the Library may also request additional information pertaining to the leave.

3.55.7 Certification for Serious Injury or Illness of a Veteran for Military Caregiver Leave

If an employee is requesting leave because of the need to care for a covered veteran with a serious injury or illness, the Library may require the employee to supply certification completed by an authorized health care provider of the covered veteran. In addition, the Library may request additional information pertaining to the leave.

3.55.8 Substitution of Paid Leave

FML is unpaid leave. If you request leave for any FML covered reason, you may be required to exhaust any remaining applicable paid time. The exhaustion of this paid leave does not extend the leave period. In addition, if you are eligible for any additional paid leaves, such as short term/long term disability or worker's compensation, these leaves will also run concurrently with FML (where appropriate) and will not extend the leave period. When using paid leave in conjunction with FML, employees must comply with the requirements of the applicable paid leave policy.

3.55.9 Benefits During Leave

During an approved FML leave, the Library will maintain the employee's health benefits as if the employee continued to remain actively employed.

3.55.10 Intermittent Leave

Leave because of a serious health condition, to care for a servicemember with a serious injury or illness or because of a qualifying exigency may be taken intermittently (in separate blocks of time due to a single covered health condition) or on a reduced leave schedule (reducing the usual number of hours an employee works per workweek or workday) if necessary. If leave is unpaid, the Library will reduce the employee's salary based on the amount of time actually worked. In addition, while the employee is on an intermittent or reduced scheduled leave, the Library may temporarily transfer the employee to an available alternate position which better accommodates the recurring leave and which has equivalent pay and benefits. A fitness for duty certification may be required to return from an intermittent absence if reasonable safety concerns exist concerning the employee's ability to perform job duties.

3.55.11 Job Restoration

If the employee wishes to return to work at the expiration of the leave, the employee is entitled to return to the same position or to an equivalent position with equal pay, benefits and other terms and conditions of employment. If the employee takes leave because of the employee's own serious health condition, the employee may be required to provide medical certification that the employee is fit to perform the essential functions of the job. Employees failing to provide the certification will not be permitted to resume work until it is provided.

3.56 General Leave of Absence

Employees who do not qualify for leave under the Family Medical Leave Act (FMLA) may request a leave of absence without pay for up to 12 weeks. Before a general leave of absence without pay is granted, the employee must have exhausted all accrued vacation, personal days, and sick leave in cases of illness of an employee or an employee's family member or all accrued vacation and personal days in cases not due to illness. Employees must be employed for at least 6 months prior to the requested leave. General Leave of Absence is granted at the discretion of the Library Director.

No guarantee is made that the employee returning from a leave of absence without pay will be returned to active employment.

A doctor's note must be provided during the period of medical leave of absence. Failure to provide certification will result in termination of the leave of absence. An employee returning to work following a medical leave of absence must present a doctor's statement stating they are able to resume activities on a regular basis prior to return to work.

Sick leave, vacation leave, personal days and IMRF credits cannot be earned while an employee is on a leave of absence without pay. While on leave of absence without pay, the employee is responsible for the continuation of health insurance and other benefits.

Failure to return from a leave of absence at the time agreed upon will be regarded as a voluntary resignation, unless otherwise agreed to in writing by the Library Director.

3.57 Military Leave
Employees will be granted a military leave of absence for the period of military service in accordance with applicable federal and state laws. Employees who are reservists or members of the National Guard are granted time off for required military training. Their eligibility for reinstatement after the completion of their military duty and training benefit continuation/eligibility issues are determined in accordance with applicable federal and state laws. Employees may elect, but are not required, to use any vacation time for the absence. Training leaves will not normally exceed two weeks per year, plus reasonable travel time. Employees called to active military duty or to reserve or National Guard training, or volunteering for the same, should submit copies of their military orders to their supervisor as soon as is practicable.

3.58 Victims' Economic Security and Safety Act (VESSA)
Eligible employees may use unpaid victims' economic and security and safety leave for up to 12 weeks in a 12-month period (as defined in 3.8.1) for any one or more of the following reasons:

- Seeking medical attention for, or recovering from, physical or psychological injuries caused by domestic or sexual violence to the employee or the employee's family or household member
- Obtaining services from a victim services organization for the employee or the employee's family or household member
- Obtaining psychological or other counseling for the employee or the employee's family or household member
- Participating in safety planning, temporarily or permanently relocating, or taking other actions to increase the safety of the employee or the employee's family or household member from future domestic or sexual violence or ensuring economic security
- Seeking legal assistance or remedies to ensure the health and safety of the employee or the employee's family or household member, including preparing for or participating in any civil or criminal legal proceeding related to or derived from domestic or sexual violence

3.58.1 Definitions
"12-Month Period" means a rolling 12-month period measured forward from the date leave is taken and continuous with each additional leave day taken.

“Domestic or Sexual Violence” means domestic violence, sexual assault, or stalking.

“Family or Household Member” means a spouse, parent, son, daughter, other person related by blood or by present or prior marriage, other person who shares a relationship through a son or daughter, and persons jointly residing in the same household.

“Parent” means the biological parent of an employee or an individual who stood in loco parentis to an employee when the employee was a child.

“Son or Daughter” means a biological, adopted, or foster child, a stepchild, a legal ward, or a child of a person standing in loco parentis, who is under 18 years of age, or is 18 years of age or older and incapable of self-care because of a mental or physical disability.

3.58.2 Coverage and Eligibility
Both full and part-time employees are eligible to apply for this leave.

3.58.3 Intermittent or Reduced Leave
An employee may take leave intermittently (a few days or a few hours at a time) or on a reduced leave schedule.

3.58.4 Substitution of Paid Leave
An employee may elect to substitute accrued paid vacation, sick, or personal time or any other applicable paid time off for any part of victims’ economic security and safety leave. Such substitution will not extend the employee’s total allotment of time off under this policy.

When the employee’s need for the leave also qualifies as family/medical leave pursuant to the Family and Medical Leave Act (FMLA), or for short-term or long-term disability, these leaves will run concurrently with leave taken pursuant to this policy, such that the total amount of unpaid leave for which an employee will be eligible in one year is 12 weeks.

3.58.5 Notice Requirement
An employee is required to give 48 hours’ notice to the Library in the event of a foreseeable leave. In unexpected or unforeseeable situations, an employee should provide as much notice as is practicable, usually verbal notice within one or two business days of when the need for leave becomes known.

3.58.6 Certification

For leaves taken pursuant to this policy, the employee may be required to submit a certification demonstrating the need for the leave. The employee in most cases must provide the certification within 15 days after it is requested.

The certification requirement may be satisfied by the submission of a sworn statement from the employee and one of the following:

- Documentation from a victim services organization, attorney, clergy, or medical or other professional from whom the employee or the family/household member has sought assistance from in addressing domestic or sexual violence and/or its effects
- A police or court record
- Other corroborating evidence

All documentation related to the employee's need for the leave pursuant to this policy will be held in strict confidence and will only be disclosed as required/permitted by law.

3.58.7 Effect on Benefits

During an approved VESSA leave, the Library will maintain the employee's health benefits, as if he or she continued to be actively employed. If paid leave is substituted for unpaid VESSA leave, the Library will deduct the employee's portion of the health plan premium as a regular payroll deduction. If the employee's leave is unpaid, he or she must pay his or her portion of the premium during the leave. The employee's group health care coverage may cease if his or her premium payment is more than 30 days late. If the employee does not return to work at the end of the leave period, he or she may be required to reimburse the Library for the cost of the premiums paid by the Library for maintaining coverage during the employee's unpaid leave, unless he or she cannot return to work because of the continuation, recurrence, or onset of domestic or sexual violence or other circumstances beyond his or her control.

3.58.8 Job Protection

If the employee wishes to return to work at the expiration of his or her leave, the employee is entitled to return to his or her same position or to an equivalent position with equal pay, benefits and other terms and conditions of employment. If the employee takes leave because of his or her own medical condition, the employee is required to provide medical certification that he or she is fit to resume work. Employees failing to provide medical certification that they are fit to return to work will not be permitted to resume work until it is provided.

3.58.9 Reasonable Accommodations

The Library supports VESSA and will attempt to provide reasonable accommodations for people who are entitled to protection under this Act in a timely

fashion, unless such accommodations would present an undue hardship for the Library.

Reasonable accommodation applies to applicants and employees and may include adjustment to a job structure, workplace facility, or work requirement, transfer, reassignment, or modified schedule, leave, a changed telephone number or seating assignment, installation of a lock, implementation of a safety procedure or assistance in documenting domestic or sexual violence that occurs at the workplace or in work-related settings, in response to actual or threatened domestic or sexual violence.

A qualified individual is an individual who, but for being a victim of domestic or sexual violence or with a family or household member who is a victim of domestic or sexual violence, can perform the essential functions of the employment position that such individual holds or desires.

Should an employee wish to request a reasonable accommodation pursuant to this policy, he or she should contact his or her supervisor or the Assistant Director.

3.59 Resignations and Terminations

All resignations are to be submitted in writing stating the date of resignation. Employees are requested to give at least 2 weeks' notice of resignation or 4 weeks for professional positions.

Upon resignation the employee will be paid for accrued vacation leave. Accumulated sick and personal days will not be paid upon resignation. Any employee who resigns and later returns to the employ of the Library shall be considered a newly-hired employee for all purposes.

Every Library employee has the status of "employee-at-will," meaning that no one has a contractual right, express or implied, to remain in the Library's employ. The Library may terminate an employee's employment or an employee may terminate his or her employment, with or without cause and with or without notice, at any time for any reason. No supervisor or other representative of the Library (except the Library Director, in writing) has the authority to enter into any agreement for employment for any specified period of time or to make any agreement contrary to the above.

Terminated employees shall be paid for accrued vacation leave.

The employee leaving the Library is requested to return building and office keys, credit card, parking permit, and any other Library property or equipment before leaving. Employees who separate from employment with outstanding debts for equipment loss

or unauthorized charges will be considered to have left employment on unsatisfactory terms and may be subject to legal action for recovery of the loss.

3.60 Continuation of Benefits

The Comprehensive Omnibus Budget Reconciliation Act (COBRA) offers employees and eligible dependents the opportunity for temporary extension of health and life coverage in certain instances where coverage under the Library's plan would otherwise end. In compliance with the Municipal Employees Continuance Privilege law, 215 ILCS 5/367j, the Library offers the continuation of its group health care coverage to:

- any employee who retires from employment and is 55 years of age or older and has sufficient years of service credit with IMRF or a reciprocating entity necessary to qualify for retirement, and;
- to employees on the first day of a disability period as long as the employee is removed from the Library's payroll.

Conditions for continuation of coverage and the length of coverage are determined by the group policy managed by the Village of Downers Grove.

3.61 Retirement

Retirement is defined as leaving the employment of the Library and receiving a pension under the provisions of the Illinois Municipal Retirement Fund (IMRF). Employees retiring from the Library who are eligible for an IMRF pension may convert unused sick days up to 240 for additional IMRF service credit.

DOWNERS GROVE PUBLIC LIBRARY
BOARD OF TRUSTEES
OCTOBER 24, 2018

ITEM 9A
2019 HVAC, Boilers, and Controls Project Release to Bid

Preliminary specifications will be provided at the meeting. Bob St. Mary from Elara Engineering will attend to answer any questions you may have about them.

The project is on schedule, according to the schedule contained in the contract with Elara Engineering. Facilities Manager Ian Knorr reviewed the permit, bid, and construction documents at the 50% complete mark early in October. The updated schedule is:

Milestone	**Date**
Design Phase	
Approval to Proceed/Signed Engineering Proposal	8/29/2018
50% Permit/Bid/Construction Documents Complete for Owner Review	10/01/2018
90% Permit/Bid/Construction Documents Complete for Owner Review	11/01/2018
Design Complete	11/07/2018
Bidding Phase	
Out for Bid	11/13/2018
Pre-Bid Meeting	11/21/2018
Bid Opening	12/4/2018
Board Meeting and Selection of Contractors	12/12/2018
Construction Phase	
Construction Begins	05/15/2019
RTUs Operational	06/05/2019
Substantial Completion	08/16/2019

I recommend that the Board approve releasing the 2019 HVAC, Boilers, and Controls Project Release to bid.

ELARA

Downers Grove Public Library
Building Review Report Matrix

Dated: June 15, 2017

Item	Description	Remaining Life Expectancy	2017 Estimate		Replacement Year (Assumes 4% escalation per year)									
				2017	2018	2019	2020	2021	2022	2023	2024	2025	2026	2027
MECHANICAL														
Rooftop Unit RTU-1	Replace equipment in its entirety One time occurrence	1-2 years	$130,000		$135,200									
Rooftop Unit RTU-2	Replace equipment in its entirety One time occurrence	1-2 years	$165,000		$171,600									
Humidifiers Serving rooftop units	Replace (2) equipment in its entirety One time occurrence	1-2 years	$12,000		$12,480									
Hot Water Boilers, Pumps, Flues Mechanical Room	Replace equipment in its entirety One time occurrence	7 years	$140,000								$184,230			
Building Pressurization Control North entrance doors	Recommission pressurization controls One time occurrence	ASAP	$5,000	$5,000										
Exhaust Fan Replacement Lower level men's restroom	Replace equipment in its entirety One time occurrence	ASAP	$5,000	$5,000										
Unit Heater Relocation Mechanical room	Relocate equipment One time occurrence, prior to next winter	ASAP	$5,000	$5,000										
Controls Upgrade Trane Tracer upgrade to Trane SC	Replace equipment in its entirety One time occurrence	Varies	$55,000		$57,200									
Boiler Controller Upgrade Mechanical Room	Replace equipment in its entirety One time occurrence	Varies	$10,000		$10,400									
VAV Boxes Replacements [1] Locations Vary	Replace equipment in its entirety Based on future renovations	Varies	$2,500 per unit	$15,000	$15,600	$16,224	$16,873	$17,548	$18,250	$18,980	$19,739	$20,529	$21,350	$22,204
Heater Replacements [2] Locations vary	Replace equipment in its entirety Based on future renovations	Varies	$3,000 per unit	$6,000	$6,240	$6,490	$6,749	$7,019	$7,300					
Exhaust Fan Replacements [3] Locations vary	Replace equipment in its entirety Based on future renovations	7 years	$2,000 per unit								$2,632	$2,737	$2,847	$2,960
Air Curtain Replacements North entrance vestibule	Replace (3) equipment in its entirety Based on future renovations	1-2 years	$6,000	$6,000							$2,632	$2,737	$2,847	$2,960
Total Estimated Mechanical Construction Costs				**$42,000**	**$408,720**	**$22,714**	**$23,622**	**$24,567**	**$25,550**	**$18,980**	**$209,233**	**$26,003**	**$27,043**	**$28,125**
ELECTRICAL														
Lighting Upgrades [4] Area 1 - 1st Level Mouse House	Retrofit fixtures with LED lamps One time occurrence	Varies 600 S.F.	$1,200											
Lighting Upgrades [4] Area 2 - 1st Level Storytime	Retrofit fixtures with LED lamps One time occurrence	Varies 1,560 S.F.	$3,120											
Lighting Upgrades [4] Area 3 - 1st Level North Staff	Retrofit fixtures with LED lamps One time occurrence	Varies 5,700 S.F.	$11,400											
Lighting Upgrades [4] Area 4 - 1st Level East Public	Retrofit fixtures with LED lamps One time occurrence	Varies 10,440 S.F.	$20,880											
Lighting Upgrades [4] Area 5 - 1st Level East Staff	Retrofit fixtures with LED lamps One time occurrence	Varies 6,830 S.F.	$13,660											
Lighting Upgrades [4] Area 6 - 1st Level Stacks	Replace fixtures with LED lamps One time occurrence	Varies 9,350 S.F.	$46,750											
Lighting Upgrades [4] Area 7 - 2nd Level North Stacks	Replace fixtures with LED lamps One time occurrence	Varies 8,880 S.F.	$44,400											
Lighting Upgrades [4] Area 8 - 2nd Level Staff	Retrofit fixtures with LED lamps One time occurrence	Varies 4,190 S.F.	$8,380											
Lighting Upgrades [4] Area 9 - 2nd Level Public	Retrofit fixtures with LED lamps One time occurrence	Varies 12,685 S.F.	$25,370											
Lighting Upgrades [4] Area 10 - 2nd Level South Stacks	Retrofit fixtures with LED lamps One time occurrence	Varies 5,370 S.F.	$10,740											
Lighting Upgrades [4] North Exterior	Retrofit fixtures with LED lamps One time occurrence	Varies	$500-750 per fixture											
Lighting Upgrades [4] South Exterior	Retrofit fixtures with LED lamps One time occurrence	Varies	$500-750 per fixture											
Room Lighting Control Locations Vary	Revise lighitng controls per energy code One time occurrence	Varies	$500-$1500 per room											
Panel Infrared Scanning Panel Locations Vary	Scan panels (preventative maintenance) Once per three years	Varies	$300 per panel	$3,000			$3,375			$3,796			$4,270	
Telecommunication Upgrade [5] Locations Vary	Upgrade existing CAT3 to CAT6 One time occurrence	Varies	$10,000											
Total Estimated Electrical Construction Costs				**$3,000**	**$0**	**$0**	**$3,375**	**$0**	**$0**	**$3,796**	**$0**	**$0**	**$4,270**	**$0**
PLUMBING														
Electric Water Heater Mechanical Room	Replace equipment in its entirety One time occurrence	1-2 years	$15,000		$15,600									
Hot Water Recirculation Pump Mechanical Room	Replace equipment in its entirety One time occurrence	1-2 years	$2,000		$2,080									
Total Estimated Plumbing Construction Costs				**$0**	**$17,680**	**$0**	**$0**	**$0**	**$0**	**$0**	**$0**	**$0**	**$0**	**$0**
Total Estimated MEP Construction Costs				**$45,000**	**$426,400**	**$22,714**	**$26,997**	**$24,567**	**$25,550**	**$22,776**	**$209,233**	**$26,003**	**$31,313**	**$28,125**

Notes:
1. VAV Box replacement quantities may vary per year based on future renovations. Costs shown are based on (6) VAV Box replacements per year.
2.. Heater replacement quantities may vary per year based on future renovations. Costs shown are based on (2) heater replacements per year.
3. Exhaust fan replacement quantities may vary per year based on future renovations. Costs shown are based on (1) exhaust fan replacement per year.
4. Lighting upgrades recommended as areas of the library are renovated.
5. IT upgrade costs are an approximate value, based on $500 per data outlet.

MECHANICAL SYMBOLS

PIPING

- NEW PIPING
- EXISTING PIPING TO REMAIN
- EXISTING PIPING TO BE DEMOLISHED
- CW — COLD/CITY WATER PIPING (DOMESTIC)
- D — DRAIN PIPING (CONDENSATE)
- HWR — HOT WATER RETURN PIPING (SECONDARY)
- HWS — HOT WATER SUPPLY PIPING (SECONDARY)
- G — NATURAL GAS PIPING
- LPS — LOW PRESSURE STEAM
- MU — MAKE-UP WATER PIPING
- ANGLE VALVE
- AQUASTAT
- BACKFLOW PREVENTER
- BALL VALVE
- BUTTERFLY VALVE
- CHECK VALVE
- CIRCUIT SETTER BALANCING VALVE
- DIRECTION OF FLOW
- DIRECTION OF PIPE PITCH, DOWN
- DRAIN VALVE WITH 3/4" THREADED HOSE ADAPTOR
- ECCENTRIC PIPE REDUCER
- FLEXIBLE PIPE CONNECTOR (OR CONNECTION)
- FLOW SWITCH
- GAS COCK
- GAS SOLENOID VALVE
- GATE VALVE
- GLOBE VALVE
- MANUAL AIR VENT
- MANUAL THREE-WAY, TWO-POSITION VALVE
- NEEDLE VALVE
- NEW PIPE CONNECTION
- ORIFICE PIPE UNION
- PIPE ALIGNMENT GUIDE
- PIPE ANCHOR
- PIPE BREAK
- PIPE CAP
- PIPE DROP/RISE
- PIPE ELBOW, 45° HORIZONTAL
- PIPE ELBOW, 90° HORIZONTAL
- PIPE ELBOW, DOWN AND 90° HORIZONTAL
- PIPE ELBOW, TURNED DOWN
- PIPE ELBOW, TURNED UP
- EJ — PIPE EXPANSION JOINT
- PIPE REDUCER/INCREASER
- PIPE REDUCER/INCREASER TEE
- PIPE SLEEVE
- PIPE TEE, BOTTOM CONNECTION, 45° OR 90° ELBOW
- PIPE TEE, DOWN
- PIPE TEE, FOUR-WAY, HORIZONTAL
- PIPE TEE, HORIZONTAL
- PIPE TEE, TOP CONNECTION, 45° OR 90° ELBOW
- PIPE TEE, UP
- PIPE UNION
- PIPE WELL
- PSI — PRESSURE GAUGE
- PRESSURE REDUCING/REGULATING VALVE
- PRESSURE/SAFETY RELIEF VALVE
- PUMP
- STRAINER
- SUCTION DIFFUSER
- TEST PLUG
- °F — THERMOMETER
- THERMOSTATIC MIXING VALVE
- THREE-WAY, MODULATING AUTOMATIC CONTROL VALVE
- THREE-WAY, TWO-POSITION AUTOMATIC CONTROL VALVE
- TRIPLE DUTY VALVE
- TWO-WAY, MODULATING AUTOMATIC CONTROL VALVE
- TWO-WAY, TWO-POSITION AUTOMATIC CONTROL VALVE

DUCTWORK

- NEW DUCTWORK
- EXISTING DUCTWORK TO REMAIN
- EXISTING DUCTWORK TO BE DEMOLISHED
- AD — ACCESS DOOR
- AUTOMATIC CONTROL (OR MOTOR OPERATED) DAMPER
- DIRECTION OF AIRFLOW
- DUCTWORK BREAK LINE (OR CONTINUATION)
- FID — FIRE DAMPER
- FC — FLEXIBLE DUCTWORK CONNECTION
- TYPE, NEXT SIZE, 6x6 NK, A, 100-S, CFM, SERVICE — GRILLE/REGISTER/DIFFUSER TAG
- VD — MANUAL VOLUME (OR BALANCING) DAMPER
- RECTANGULAR EXHAUST/RETURN DUCTWORK DOWN
- RECTANGULAR EXHAUST/RETURN DUCTWORK UP
- RECTANGULAR SUPPLY DUCTWORK DOWN
- RECTANGULAR SUPPLY DUCTWORK UP
- ROUND DUCTWORK DOWN
- ROUND DUCTWORK UP

GENERAL

- T — DDC OR STANDALONE PROGRAMMABLE THERMOSTAT
- P, 1 — TYPE, NUMBER — EQUIPMENT TAG
- FLOOR DRAIN
- POINT OF CONNECTION OF NEW TO EXISTING WORK
- DPS — DIFFERENTIAL PRESSURE SWITCH
- DPT — DIFFERENTIAL PRESSURE TRANSDUCER
- VFD — VARIABLE FREQUENCY DRIVE

NOTE: NOT ALL SYMBOLS LISTED ABOVE MAY BE USED OR APPEAR IN THESE DRAWINGS.

GENERAL CONSTRUCTION NOTES FOR BUILDING AUTOMATION WORK (BAS)

1. THE CONTROLS CONTRACTOR SHALL BE THE CONTROLS ENGINEER FOR THIS PROJECT: RESPONSIBLE FOR DESIGN AND ENGINEERING OF ALL CONTROL SYSTEMS TO OPERATE AS DESCRIBED IN THE SEQUENCE OF OPERATION. TO CONFORM WITH THE GOVERNING BUILDING CODES AND OPERATE IN A MANNER CONSISTENT WITH KNOWN GOOD CONTROLS ENGINEERING PRACTICE.
2. THE CONTROLS CONTRACTOR/ENGINEER SHALL IDENTIFY ANY POTENTIAL CONDITIONS THAT COULD BE CONSTRUED TO DEVIATE FROM GOOD CONTROLS ENGINEERING PRACTICE PRIOR TO BIDDING AND INCLUDE ALL ENGINEERING AND INSTALLATION WORK REQUIRED TO MAKE ALL HVAC SYSTEMS COMPLETE AND OPERATIONAL, IN CONFORMANCE WITH GOOD CONTROLS ENGINEERING PRACTICE: PRIOR TO SUBMITTING HIS BID.
3. THE BAS CONTRACTOR SHALL PROVIDE ALL CONTROL COMPONENTS, WIRING, INTERLOCKS, ELECTRICAL POWER, AND ALL OTHER DEVICES REQUIRED TO MAKE ALL HVAC EQUIPMENT INSTALLED UNDER THIS PROJECT COMPLETE AND FULLY OPERATIONAL PER THE SEQUENCE OF OPERATION AND AS REQUIRED FOR SAFE AND ACCURATE CONTROL.
4. THE BAS CONTRACTOR SHALL PROVIDE ALL CONTROL VALVES AND ACTUATORS TO THE MECHANICAL CONTRACTOR FOR INSTALLATION. THE BAS CONTRACTOR SHALL DIRECT THE MECHANICAL CONTRACTOR AS TO THE PROPER LOCATION AND ORIENTATION OF ALL DEVICES TO ACHIEVE A PROPER AND CORRECT CONTROL SEQUENCE.
5. THE BAS CONTRACTOR SHALL INCLUDE ADEQUATE TIME IN HIS BID FOR COMPLETE COMMISSIONING OF THE MECHANICAL SYSTEMS, ON SITE IN COORDINATION WITH THE MECHANICAL CONTRACTOR AND OTHER TRADES AS REQUIRED TO MAKE ALL EQUIPMENT COMPLETE AND FULLY OPERATIONAL.
6. IN THE EVENT THAT ANY PART OF THE MECHANICAL DRAWINGS, SPECIFICATIONS, OR NOTES CONFLICT WITH ANY OTHER: THE MOST STRINGENT REQUIREMENT SHALL APPLY, PROVIDING THE GREATEST SAFETY AND/OR AT THE HIGHEST COST OF THE CONFLICTING OPTIONS.
7. THE BAS CONTRACTOR SHALL PROVIDE ALL ELECTRICAL POWER AND CONTROL WIRING, CONDUIT, JUNCTION BOXES, RACEWAY, TRANSFORMERS, RELAYS, AND ALL OTHER ELECTRICAL APPURTENANCES REQUIRED FOR A COMPLETE AN FULLY OPERATIONAL CONTROL SYSTEM. THIS INCLUDES ALL POWER WIRING FROM SPARE CIRCUIT BREAKERS PROVIDED IN BUILDING EMERGENCY PANELS FOR POWERING OF CONTROLS AND CONTROL PANELS AND ALL OTHER CONTROL SYSTEM COMPONENTS.
8. ALL ELECTRICAL WORK SHALL BE IN CONFORMANCE WITH THE STATE OF ILLINOIS SCHOOL ADOPTED ELECTRICAL CODE AND APPLICABLE STATE AND LOCAL AMENDMENTS.
9. THE BAS CONTRACTOR SHALL PROVIDE AND INSTALL ALL HARDWIRED INTERLOCKS BETWEEN STARTERS AS REQUIRED TO ACHIEVE THE SEQUENCE OF OPERATION AND PROPER SYSTEM CONTROLS. PROVIDE RELAYS AS REQUIRED FOR AUTOMATIC START/STOP OF ALL SINGLE PHASE EXHAUST FANS AND INTERLOCK OF AUTOMATIC DAMPERS.
10. ALL CONTROL VALVES SHALL SPRING RETURN TO A FAIL SAFE POSITION. ALL HEATING CONTROL VALVES SHALL FAIL OPEN BY SPRING RETURN TO HEATING AND ALL COOLING CONTROL VALVES SHALL FAIL CLOSED BY SPRING RETURN.
11. ALL CONTROL VALVES USED FOR POSITIVE SHUT-OFF ISOLATION SHALL BE QUARTER TURN TYPE BUTTERFLY OR BALL VALVES RATED FOR 300 PSI, BUBBLE TIGHT SHUT-OFF SERVICE.
12. THE CONTROLS CONTRACTOR/ENGINEER SHALL SIZE ALL MODULATING TEMPERATURE CONTROL VALVES WITH A CV AND PRESSURE DROP SUCH THAT THERE IS LINEAR CONTROL OF WATER FLOW THROUGHOUT THE ENTIRE STROKE OF THE VALVE. COORDINATE WITH THE MECHANICAL CONTRACTOR TO PROVIDE REDUCERS AS REQUIRED FOR MODULATING VALVES THAT ARE NOT LINE SIZE.
13. THE BAS CONTRACTOR SHALL PROVIDE THERMOSTATS FOR ALL CONTROLLED EQUIPMENT TO OPERATE AS DESCRIBED IN THE SEQUENCE OF OPERATION AND/OR PER MANUFACTURER'S REQUIREMENTS AND KNOWN STANDARDS OF GOOD CONTROL PRACTICE. INCLUDE ALL THERMOSTATS AS REQUIRED FOR EQUIPMENT TO BE COMPLETE AND FULLY OPERATIONAL WHETHER SHOWN SPECIFICALLY ON THE PLANS OR NOT.
14. ALL TEMPERATURE SENSORS IN DUCTWORK, AIR HANDLING UNITS, AND PLENUMS SHALL BE OF AVERAGING TYPE. PROPERLY SUPPORT AVERAGING ELEMENT (MINIMUM TWENTY FEET LENGTH) ACROSS A REPRESENTATIVE AREA TO ACHIEVE A TRUE AVERAGE READING. SUPPORT SENSORS USING HEAVY CABLE AND/OR HALF INCH CONDUIT WITH NYLON WIRE TIES.
15. THE CONTROLS CONTRACTOR/ENGINEER SHALL SELECT ALL PRESSURE AND TEMPERATURE SENSORS WITH AN APPROPRIATE SPAN AND RANGE FOR THE APPLICATION.
16. ALL OUTDOOR AIR SENSORS SHALL BE INSTALLED WITH SUN SHIELD AND IN A LOCATION WHERE THEY CANNOT BY WASHED BY EXHAUST AIR OUR OTHER SOURCES OF FALSE READINGS.
17. ALL TEMPERATURE AND PRESSURE SENSORS SHALL BE INSTALLED IN LOCATIONS SUCH THAT THEY DO NO MAKE FALSE READINGS. BAS CONTRACTOR/ENGINEER SHALL REVIEW THE PLANS AND IDENTIFY ANY SUCH POTENTIAL CAUSES FOR FALSE READINGS AND NOTIFY THE ENGINEER IN WRITING THAT THESE SHOULD BE RELOCATED PRIOR TO ROUGH-IN AND CONTROLS INSTALLATION. THE BAS CONTROLS CONTRACTOR SHALL RELOCATE ANY SENSORS INSTALLED IN IMPROPER LOCATIONS AND GIVING FALSE READINGS AT HIS OWN EXPENSE. CONDITIONS TO BE AWARE OF SHALL INCLUDE BUT ARE NOT LIMITED TO LOCATIONS OF THERMOSTATS BEHIND DOORS, OUTDOOR AIR SENSORS NEAR EXHAUST OPENINGS, STATIC PRESSURE SENSORS IN TURBULENT LOCATIONS, THERMOSTATS INSTALLED ADJACENT TO HEAT SOURCES SUCH AS COFFEE POTS, COMPUTERS, VENDING MACHINES, AND OTHER APPLIANCES, ETC.
18. THE BAS CONTRACTOR/ENGINEEER SHALL FURNISH AND INSTALL MANUAL RESET SAFETY DEVICES FOR ANY AND ALL CONDITIONS THAT COULD DAMAGE THE EQUIPMENT AND/OR REPRESENT A THREAT TO HUMAN SAFETY. ALL WATER COILS SHALL BE PROTECTED BY AN AVERAGING ELEMENT FREEZE-STAT WITH A NON-ADJUSTABLE 40°F SET POINT, MANUAL RESET, AND HARDWIRED INTERLOCK TO SHUT DOWN THE ASSOCIATED FAN ANY TIME THE TEMPERATURE ACROSS ANY 12" LENGTH OF THE AVERAGING ELEMENT FALLS BELOW 40°F. FREEZE STATS SHALL BE INSTALLED DOWNSTREAM OF ALL WATER COILS.
19. BOILERS SHALL BE INTERLOCKED TO ONLY FIRE AFTER PROOF OF WATER FLOW AND THAT THE COMBUSTION AIR IS AVAILABLE.
20. THE BAS CONTRACTOR SHALL WIRE ALL SUPPLY FANS OVER 2000 CFM TO THE LOCAL DUCT SMOKE DETECTOR TO SHUT DOWN THE SUPPLY FAN ON SMOKE ALARM.
21. CENTRAL HEATING AND/OR COOLING PUMPS SHALL HAVE A LOCAL CONTROL FOR PROOF OF FLOW AND AUTOMATIC STARTING OF THE STANDBY PUMP WHEN THE LEAD PUMP FAILS.

GENERAL MECHANICAL DEMOLITION NOTES

A. ALL WORK SHALL BE PERFORMED IN A CLEAN AND WORKMANLIKE MANNER. CARE SHALL BE EXERCISED TO MINIMIZE ANY INCONVENIENCE OR DISTURBANCE TO OTHER AREAS OF THE BUILDING WHICH ARE TO REMAIN IN OPERATION.

B. ALL DEMOLITION OF THE HVAC SYSTEM AS CALLED FOR ON THE DEMOLITION DRAWINGS SHALL BE UNDER THIS CONTRACTOR'S WORK.

C. CONTRACTOR SHALL VISIT THE BUILDING, BEFORE SUBMITTING HIS BID, TO VERIFY ALL DIMENSIONS AND EXISTING CONDITIONS WHICH MAY AFFECT HIS WORK.

D. BEFORE STARTING ANY DEMOLITION WORK ON HVAC EQUIPMENT WHICH HAS AN ELECTRICAL CONNECTION AND IS INDICATED TO BE REMOVED, THIS CONTRACTOR SHALL MEET WITH ELECTRICAL CONTRACTOR TO IDENTIFY ALL SUCH EQUIPMENT. ELECTRICAL CONTRACTOR SHALL DISCONNECT THE POWER TO EACH UNIT AND REMOVE CONDUIT, WIRING, DISCONNECT SWITCHES, AND STARTERS UNDER THIS CONTRACT. THIS CONTRACTOR SHALL REMOVE ALL EQUIPMENT, ELECTRICAL TEMPERATURE CONTROL WIRING, AND CONDUIT UNDER THIS CONTRACT.

E. CONTRACTOR SHALL BE RESPONSIBLE FOR HIS OWN CLEANUP THROUGHOUT THE COURSE OF THE DEMOLITION WORK.

F. NO EQUIPMENT, PIPING, VALVES, ETC. SHALL BE REMOVED, DISCONNECTED OR SHUT DOWN WITHOUT PRIOR REVIEW WITH THE OWNER AND/OR ENGINEER TO CONFIRM THAT AREAS TO REMAIN IN OPERATION WILL NOT BE AFFECTED. IF ANY AREAS NOT WITHIN THE SCOPE OF WORK ARE AFFECTED BY ANY SHUTDOWN, ONE (1) WEEK ADVANCE NOTICE SHALL BE GIVEN TO THE OWNER. SHUTDOWNS SHALL BE A MAXIMUM OF EIGHT (8) HOURS UNLESS OTHERWISE INDICATED.

G. ALL EQUIPMENT, MATERIAL, ETC. THAT IS BEING DEMOLISHED WILL BECOME THE PROPERTY OF THE CONTRACTOR UNLESS OTHERWISE NOTED. ALL SUCH ITEMS WILL BE REMOVED FROM THE BUILDING SITE BY THE CONTRACTOR IN A PROPER AND LEGAL MANNER. NO ITEM WHICH IS BEING REMOVED UNDER THE DEMOLITION CONTRACT MAY BE REUSED UNDER THE NEW WORK CONTRACT UNLESS NOTED ON THE DRAWINGS. ALL ITEMS TO BE TURNED OVER TO THE OWNER SHALL BE STORED PER THE OWNER'S INSTRUCTION.

H. SEQUENCE OF ALL DEMOLITION WORK SHALL BE IN STRICT ACCORDANCE WITH THE CONTRACT DOCUMENTS AND/OR AS DIRECTED BY THE ENGINEER. ALL SHUTDOWNS OF EXISTING SYSTEMS SHALL BE SCHEDULED AND APPROVED BY THE OWNER.

I. COORDINATE ALL MATERIAL DELIVERIES WITH THE OWNER.

J. IF ANY ISOLATION VALVES SHOULD FAIL DURING DEMOLITION, OTHER THAN THOSE CALLED OUT TO BE REPLACED, THIS CONTRACTOR SHALL REPAIR/REPLACE THE VALVE AND SUBMIT A CHANGE ORDER REQUEST FOR APPROVAL.

K. THE CONTRACTOR PERFORMING THE DEMOLITION WORK SHALL REMOVE NO MORE THAN 8" OF BUILDING MATERIAL AROUND EACH DEVICE BEING DEMOLISHED. PROVIDE PATCHING AS REQUIRED FOR FINISHED WORK. THE CONTRACTOR SHALL OBTAIN APPROVAL FROM OWNER OR ENGINEER PRIOR TO PERFORMING REMOVAL OF MATERIAL FROM EXISTING BUILDING CONSTRUCTION.

L. CONTRACTOR SHALL PROTECT ALL WINDOWS AND SURFACES DURING DEMOLITION. ANY COSTS INCURRED BY DAMAGE FROM CUTTING TORCHES, SPARKS, HEAT, OR OTHER DEMOLITION PROCEDURES WILL NOT BE THE RESPONSIBILITY OF THE OWNER.

M. CONTRACTOR SHALL BE RESPONSIBLE FOR PROVIDING ALL LABOR AND MATERIAL REQUIRED TO PATCH ALL OPENINGS IN EXISTING WALLS, FLOORS, AND FIRE SEPARATIONS CREATED BY THE REMOVAL OF EACH TRADE'S MATERIAL AND EQUIPMENT WHERE THESE OPENINGS ARE NOT TO BE REUSED. CONTRACTOR SHALL BE RESPONSIBLE FOR REPAIR AT AREAS THAT MECHANICAL EQUIPMENT WAS REMOVED BACK TO ITS ORIGINAL CONDITION INCLUDING ALL DRYWALL, PLASTER, PAINTING, ETC. CONTRACTOR SHALL EMPLOY TRADES EXPERIENCED IN GENERAL CONSTRUCTION TO PATCH ALL OPENINGS. TOOTH IN MASONRY USING WHOLE UNITS TO MATCH EXISTING MASONRY CONSTRUCTION.

N. EXISTING PLUMBING, ELECTRICAL, AND FIRE PROTECTION SYSTEMS NOT SHOWN SHALL REMAIN UNLESS INDICATED TO BE DEMOLISHED ON THE MECHANICAL AND ELECTRICAL PLANS. INSTALLATION OF NEW EQUIPMENT MAY NECESSITATE THE REROUTING OF EXISTING SYSTEMS TO REMAIN. COORDINATE WITH ENGINEER AND OWNER.

ABBREVIATIONS

ACD	AUTOMATIC CONTROL DAMPER
ACV	AUTOMATIC CONTROL VALVE
AD	ACCESS DOOR
AFF	ABOVE FINISHED FLOOR
AHU	AIR HANDLING UNIT
AP	ACCESS PANEL
APD	AIR PRESSURE DROP
AS	AIR SEPARATOR
B	BOILER
BAS	BUILDING AUTOMATION SYSTEM
BASC	BUILDING AUTOMATION SYSTEM CONTRACTOR
BFV	BUTTERFLY VALVE
BHP	BRAKE HORSEPOWER
BOD	BOTTOM OF DUCT
BOI	BOTTOM OF INSULATION
BOP	BOTTOM OF PIPE
BTU	BRITISH THERMAL UNIT
BTUH	BRITISH THERMAL UNIT PER HOUR
BV	BALL VALVE
BWR	BOILER WATER RETURN
BWS	BOILER WATER SUPPLY
C	COMMON
CBV	CIRCUIT BALANCING VALVE
CC	COOLING COIL
CFH	CUBIC FEET PER HOUR
CFM	CUBIC FEET PER MINUTE
CHWR	CHILLED WATER RETURN
CHWS	CHILLED WATER SUPPLY
CK	GAS COCK
CKV	CHECK VALVE
CO	CLEANOUT
COND	CONDENSATE
COP	COEFFICIENT OF PERFORMANCE
CR	CONDENSATE RETURN
CU	CONDENSING UNIT
CV	CONVECTOR
CW	COILD (OR CITY) WATER
D	DRAIN
DB	DRY BULB
DG	DOOR GRILLE
DN	DOWN
DS	DUCT SLEEVE
-E	EXHAUST
EA	EXHAUST AIR
EAD	EXHAUST AIR DAMPER
EAT	ENTERING AIR TEMPERATURE
EC	ELECTRICAL CONTRACTOR
ECM	ELECTRONICALLY COMMUTATED MOTOR
EER	ENERGY EFFICIENCY RATIO
EF	EXHAUST FAN
EJ	EXPANSION JOINT
ESP	EXTERNAL STATIC PRESSURE
ET	EXPANSION TANK
EUH	ELECTRIC UNIT HEATER
EWT	ENTERING WATER TEMPERATURE
F	FAHRENHEIT
FC	FLEXIBLE CONNECTOR (OR CONNECTION)
FCU	FAN COIL UNIT
FD	FLOOR DRAIN
FID	FIRE DAMPER
FFA	FROM FLOOR ABOVE
FFB	FROM FLOOR BELOW
FLA	FULL LOAD AMPS
FPF	FINS PER FOOT
FPI	FINS PER INCH
FPM	FEET PER MINUTE
FS	FILL SYSTEM
FTR	FINNED TUBE RADIATION
FV	FACE VELOCITY
G	GAS
GA	GAUGE
GPM	GALLONS PER MINUTE
GV	GATE VALVE
HC	HEATING COIL
HP	HORSEPOWER
HWR	HOT WATER RETURN
HWS	HOT WATER SUPPLY
HX	HEAT EXCHANGER
IPLV	INTEGRATED PART LOAD VALUE
LAT	LEAVING AIR TEMPERATURE
LWT	LEAVING WATER TEMPERATURE
MAU	MAKE-UP AIR UNIT
MBH	MILLION BRITISH THERMAL UNITS PER HOUR
MC	MECHANICAL CONTRACTOR
MCA	MINIMUM CIRCUIT AMPACITY
MOCP	MAXIMUM OVER-CURRENT PROTECTION
MOD	MOTOR OPERATED DAMPER
MU	MAKE-UP WATER
NC	NORMALLY CLOSED
NIC	NOT IN CONTRACT
NK	NECK
NO	NORMALLY OPEN
NTS	NOT TO SCALE
OA	OUTDOOR AIR
OAD	OUTDOOR AIR DAMPER
OSD	OPEN SITE DRAIN
P	PUMP
PD	PRESSURE DROP
PHC	PREHEAT COIL
PRD	PRESSURE RELIEF DOOR
PRV	PRESSURE REDUCING (OR REGULATING) VALVE
PS	PIPE SLEEVE
PSI	POUNDS PER SQUARE INCH
-R	RETURN
RA	RETURN AIR
RAD	RETURN AIR DAMPER
RF	RETURN FAN
RHC	REHEAT COIL
RL	REFRIGERANT LIQUID
RPM	REVOLUTIONS PER MINUTE
RS	REFRIGERANT SUCTION
RTU	ROOFTOP UNIT
RV	RELIEF VALVE
-S	SUPPLY
SA	SUPPLY AIR
SEER	SEASONAL ENERGY EFFICIENCY RATIO
SF	SUPPLY FAN
SP	STATIC PRESSURE
SS	STAINLESS STEEL
SST	SATURATED SUCTION TEMPERATURE
STR	STRAINER
SUH	SUSPENDED UNIT HEATER
T	THERMOSTAT
-T	TRANSFER
TDH	TOTAL DYNAMIC HEAD
TDV	TRIPLE DUTY VALVE
TYP	TYPICAL
TFA	TO FLOOR ABOVE
TFB	TO FLOOR BELOW
TSP	TOTAL STATIC PRESSURE
UC	UNDERCUT DOOR
UH	UNIT HEATER
UV	UNIT VENTILATOR
V	VENT
VD	VOLUME DAMPER
VFD	VARIABLE FREQUENCY DRIVE
VTR	VENT THROUGH ROOF
WB	WET BULB
WC	WATER COLUMN
WG	WATER GAUGE
WL	WALL LOUVER
WMS	WIRE MESH SCREEN
WPD	WATER PRESSURE DROP
VSD	VARIABLE SPEED DRIVE

NOTE: NOT ALL ABBREVIATIONS LISTED ABOVE MAY BE USED OR APPEAR IN THESE DRAWINGS.

##/##/#### XXXXXXXXXXXXXXXXXXX

PRELIMINARY - NOT FOR CONSTRUCTION

ELARA

30 N. Wolf Rd., Second Floor
Hillside, IL 60162

(708) 236-0300
(708) 236-0330 FAX

ISSUE/REVISION:

REV.	DATE	DESCRIPTION

PROJECT:

_PROJECT NAME

_PROJECT ADDRESS

DRAWING TITLE:

####

DESIGNED BY:	XXX
DRAWN BY:	XXX
CHECKED BY:	XXX
PROJECT NO:	_project number
SCALE:	#/#" = 1'-0"

SHEET NO.

M0.01

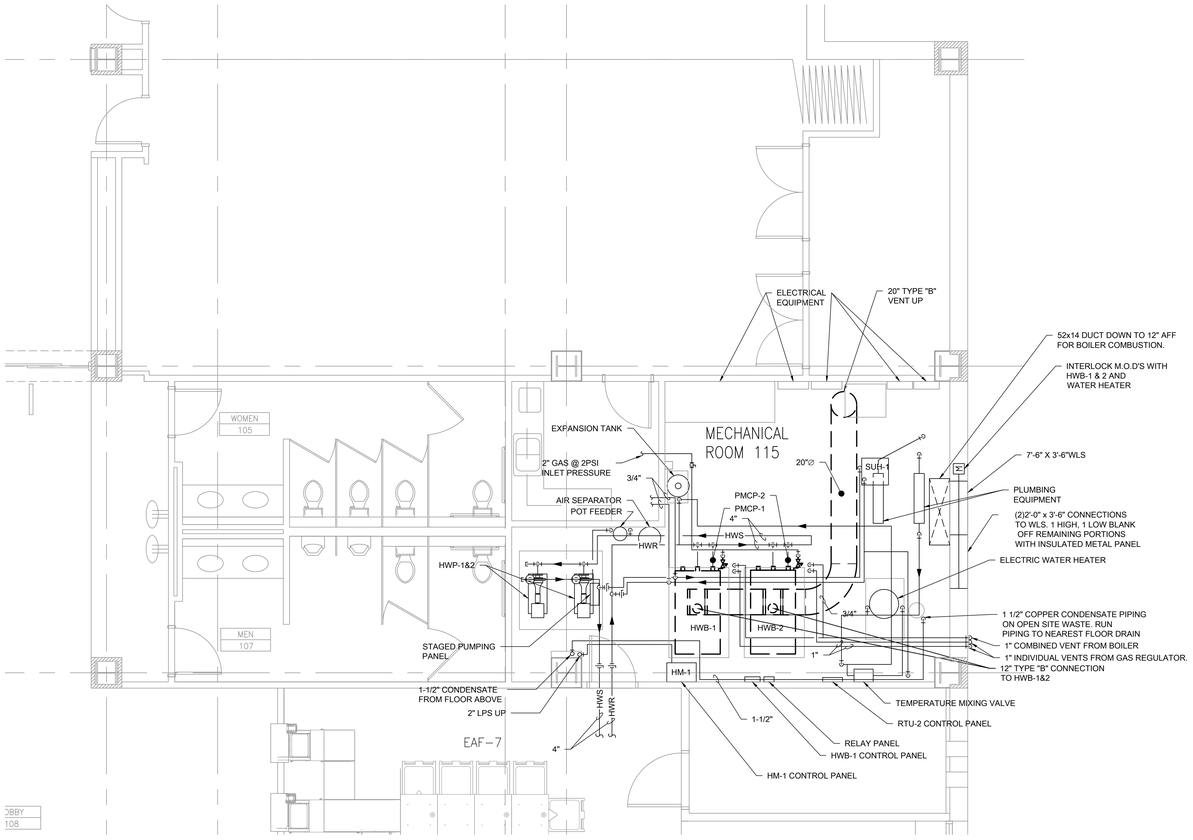

1 MECHANICAL ROOM DEMO PLAN

SCALE: 1/4" = 1'-0" 0 2' 4' 8'

KEYED MECHANICAL DEMOLITION SHEET NOTES

1. EXISTING HOT WATER BOILERS AND ASSOCIATED PIPING, FLUES, VALVES, FITTINGS, ETC. TO BE DISCONNECTED AND REMOVED. EXISTING CONCRETE PAD TO REMAIN AND TO BE REUSED. REFER TO MECHANICAL NEW WORK PLANS FOR MORE INFORMATION.
2. EXISTING HOT WATER INLINE PUMPS AND ASSOCIATED ACCESSORIES TO BE DISCONNECTED AND REMOVED COMPLETELY.
3. EXISTING HOT WATER SECONDARY PUMPS AND ASSOCIATED ACCESSORIES TO BE DISCONNECTED AND REMOVED COMPLETELY. EXISTING CONCRETE PAD TO REMAIN.
4. DISCONNECT AND REMOVE EXISTING HOT WATER SUPPLY AND RETURN PIPING, FITTINGS, ACCESSORIES, ETC. UP TO LOCATION SHOWN. REFER TO MECHANICAL NEW WORK PLANS FOR MORE INFORMATION.
5. EXISTING HOT WATER EXPANSION TANK TO BE COMPLETELY REMOVED INCLUDING ALL PIPING, FITTINGS, VALVES, INSULATION, ETC.
6. EXISTING HOT WATER AIR SEPARATOR TO BE COMPLETELY REMOVED.
7. EXISTING VENT CONNECTIONS AND 20"Ø COMMON VENT FROM BOILERS TO DISCONNECTED AND REMOVED COMPLETELY TO THE POINT SHOWN ON PLANS. ABANDON 20" VENT ON ROOF AND CAP AT ENTRANCE INTO MECHANICAL ROOM.
8. EXISTING HUMIDIFIER AND ASSOCIATED ACCESSORIES TO BE DISCONNECTED AND REMOVED COMPLETELY.
9. ALL EXISTING CONDENSATE RETURN PIPING, FITTINGS, HANGERS, VALVES, ETC. TO BE DISCONNECTED AND REMOVED UP TO THE POINT SHOWN ON PLANS. ABANDON ALL IN CHASE CONDENSATE RETURN PIPING AND CAP PIPE AT ENTRANCE INTO MECHANICAL ROOM.
10. ALL EXISTING LOW PRESSURE STEAM PIPING, FITTINGS, HANGERS, VALVES, STEAM TRAPS, ETC. TO BE DISCONNECTED AND REMOVED. ABANDON ALL IN CHASE LOW PRESSURE STEAM PIPING AND CAP PIPE AT ENTRANCE TO MECHANICAL ROOM AS NECESSARY.
11. EXISTING HOT WATER HEATER AND ASSOCIATED PIPING, FLUES, VALVES, FITTINGS EXPANSION TANK, ETC. TO REMAIN.
12. EXISTING HOT WATER SUPPLY AND RETURN PIPING, FITTINGS, VALVES, ETC. TO REMAIN.
13. EXISTING GAS PIPING, FITTINGS, VALVES, ETC. TO BE DISCONNECTED AND REMOVED TO POINT SHOWN ON PLANS. CAP EXISTING GAS PIPING AT POINT SHOWN ON PLANS.
14. EXISTING GAS PIPING, FITTINGS, VALVES, ETC. TO REMAIN.
15. EXISTING MANUALLY OPERATED CONTROL DAMPER AND ASSOCIATED DUCTWORK , ETC. TO BE REMOVED COMPLETELY. MAKE PROVISIONS FOR TWO 8" SPIRAL DUCTS FOR FUTURE BOILERS THROUGH WALL MOUNTED LOUVER. BLANK OFF REMAINING PORTIONS WITH INSULATED METAL PANEL AND MAKE IT WEATHER TIGHT.
16. EXISTING DOMESTIC HOT WATER SUPPLY AND RETURN PIPING, FITTINGS, VALVES, ETC. TO REMAIN.
17. EXISTING DOMESTIC COLD WATER PIPING, FITTINGS, VALVES, ETC. TO REMAIN.

ELARA
30 N. Wolf Rd., Second Floor
Hillside, IL 60162
(708) 236-0300
(708) 236-0330 FAX

ISSUE/REVISION:

REV.	DATE	DESCRIPTION

PROJECT:

_PROJECT NAME

_PROJECT ADDRESS

DRAWING TITLE:

####

DESIGNED BY:	XXX
DRAWN BY:	XXX
CHECKED BY:	XXX
PROJECT NO:	_project number
SCALE:	#/#" = 1'-0"

SHEET NO.

MD-1.00

##/##/#### XXXXXXXXXXXXXXXXXXX

PRELIMINARY - NOT FOR CONSTRUCTION

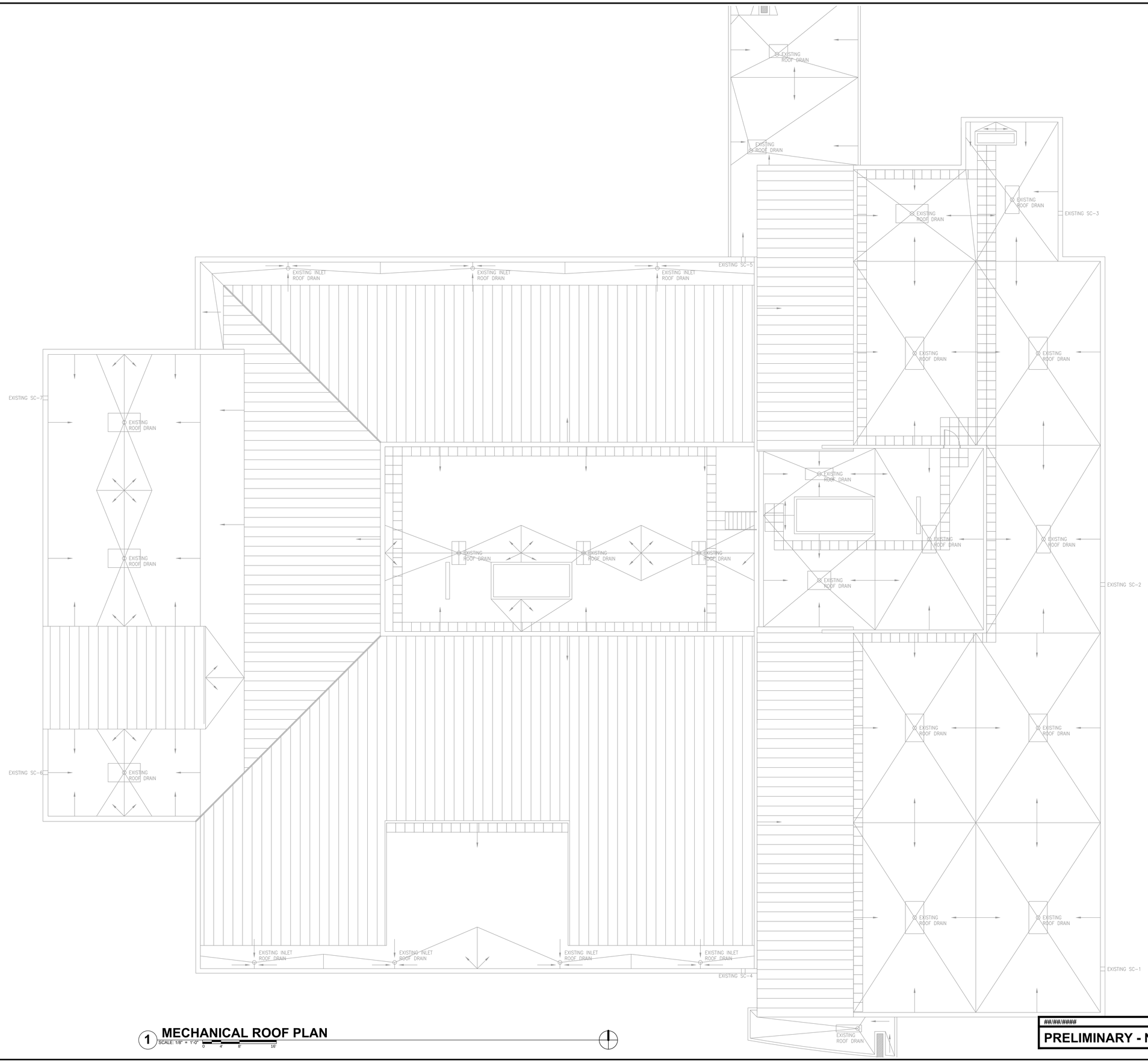

1 **MECHANICAL ROOF PLAN**
SCALE: 1/8" = 1'-0"
0 4' 8' 16'

##/##/#### XXXXXXXXXXXXXXXXXX

PRELIMINARY - NOT FOR CONSTRUCTION

ELARA
30 N. Wolf Rd., Second Floor
Hillside, IL 60162
(708) 236-0300
(708) 236-0330 FAX

ISSUE/REVISION:

REV.	DATE	DESCRIPTION

PROJECT:
_PROJECT NAME
_PROJECT ADDRESS

DRAWING TITLE:
####

DESIGNED BY:	XXX
DRAWN BY:	XXX
CHECKED BY:	XXX
PROJECT NO:	_project number
SCALE:	#/#" = 1'-0"

SHEET NO.
M1.02

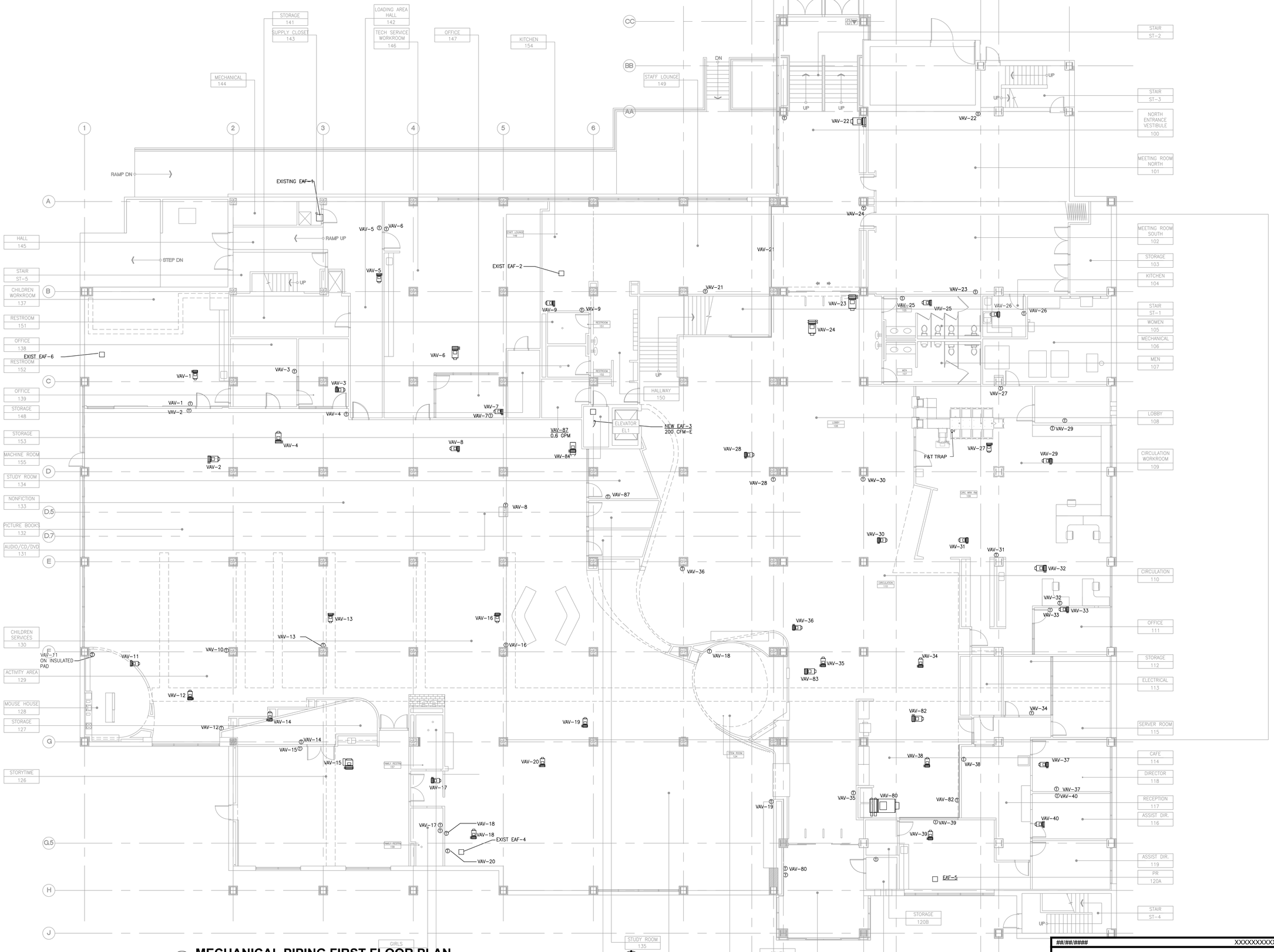

1 MECHANICAL PIPING FIRST FLOOR PLAN

SCALE: 1/8" = 1'-0" 0 4' 8' 16'

##/##/#### XXXXXXXXXXXXXXXXXX

PRELIMINARY - NOT FOR CONSTRUCTION

ELARA
30 N. Wolf Rd., Second Floor
Hillside, IL 60162
(708) 236-0300
(708) 236-0330 FAX

ISSUE/REVISION:

REV.	DATE	DESCRIPTION

PROJECT:

_PROJECT NAME

_PROJECT ADDRESS

DRAWING TITLE:

####

DESIGNED BY:	XXX
DRAWN BY:	XXX
CHECKED BY:	XXX
PROJECT NO:	_project number
SCALE:	#/#" = 1'-0"

SHEET NO.

M2.00

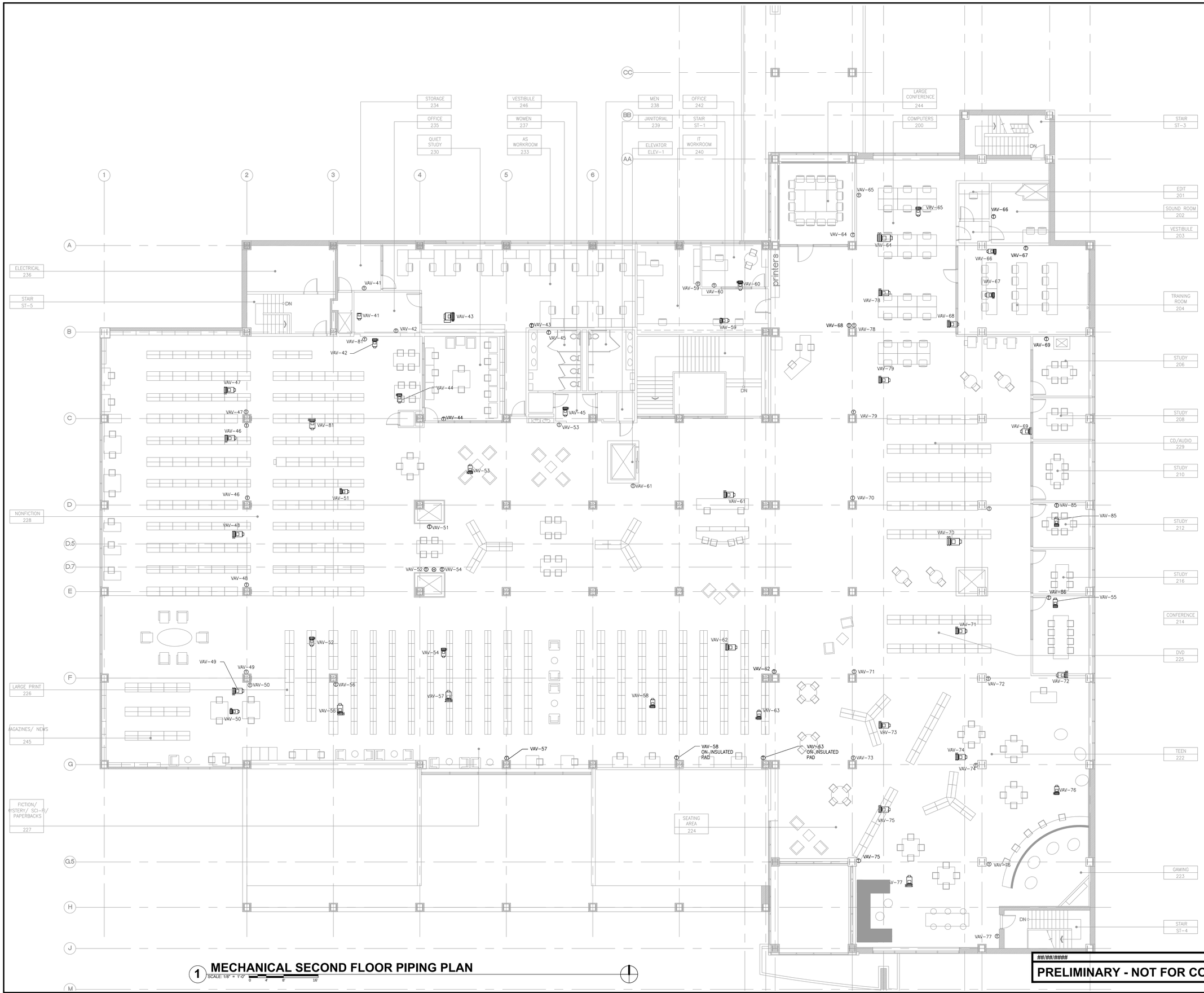

1 MECHANICAL SECOND FLOOR PIPING PLAN

SCALE: 1/8" = 1'-0"

ELARA

30 N. Wolf Rd., Second Floor
Hillside, IL 60162

(708) 236-0300
(708) 236-0330 FAX

ISSUE/REVISION:

REV.	DATE	DESCRIPTION

PROJECT:

_PROJECT NAME

_PROJECT ADDRESS

DRAWING TITLE:

####

DESIGNED BY:	XXX
DRAWN BY:	XXX
CHECKED BY:	XXX
PROJECT NO:	_project number
SCALE:	#/#" = 1'-0"

SHEET NO.

M2.01

##/##/#### XXXXXXXXXXXXXXXXXXX

PRELIMINARY - NOT FOR CONSTRUCTION

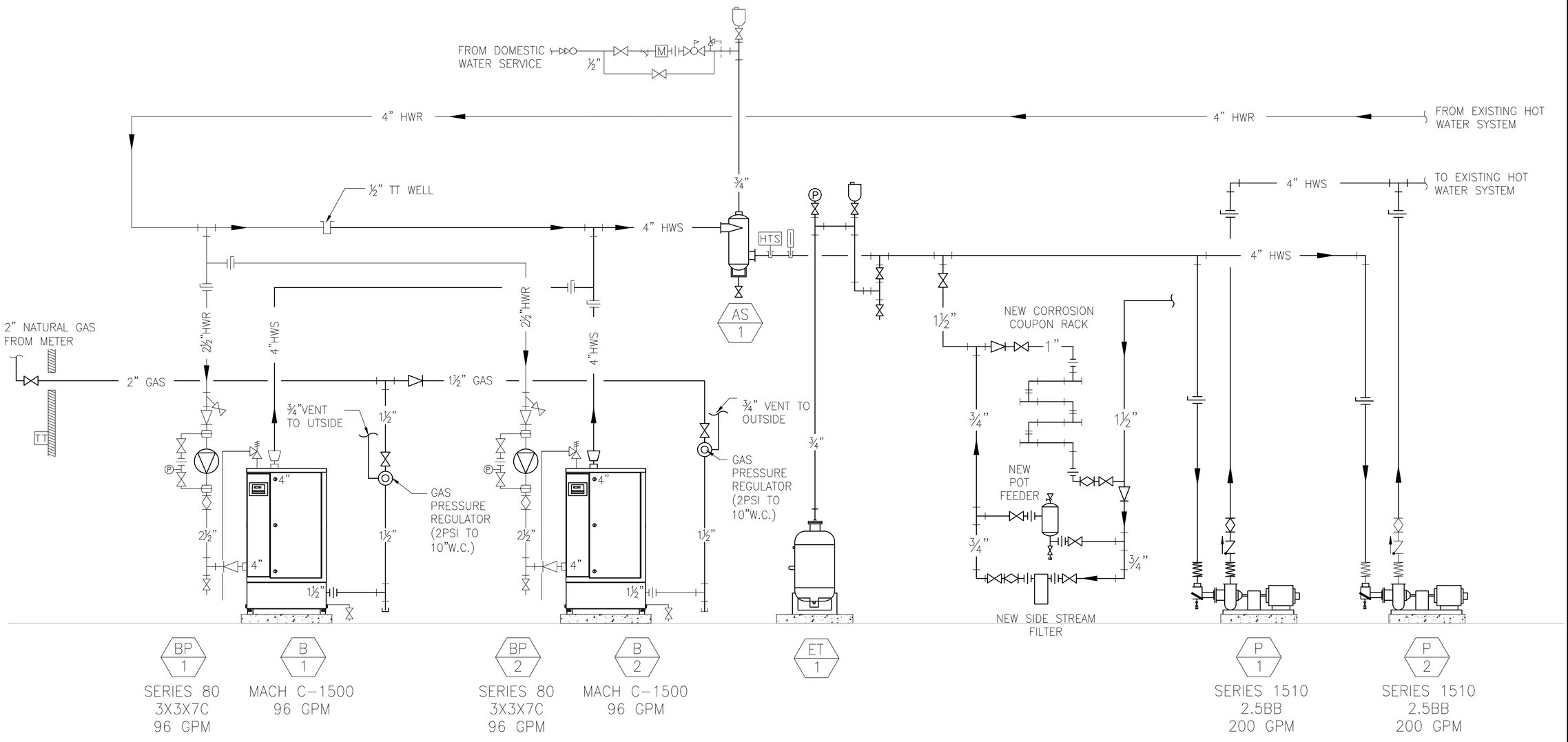

1 MECHANICAL HOT WATER FLOW DIAGRAM
SCALE: NO SCALE

ELARA
30 N. Wolf Rd., Second Floor
Hillside, IL 60162
(708) 236-0300
(708) 236-0330 FAX

ISSUE/REVISION:

REV.	DATE	DESCRIPTION

PROJECT:
_PROJECT NAME
_PROJECT ADDRESS

DRAWING TITLE:
####

DESIGNED BY:	XXX
DRAWN BY:	XXX
CHECKED BY:	XXX
PROJECT NO:	_project number
SCALE:	#/#" = 1'-0"

SHEET NO.
M3.0

##/##/#### XXXXXXXXXXXXXXXXXXX
PRELIMINARY - NOT FOR CONSTRUCTION

PACKAGED ROOFTOP UNIT SCHEDULE (RTU)

EQUIP. TAG	GENERAL DATA							DIMENSIONAL DATA (INCHES)			SUPPLY FAN DATA													EXHAUST FAN DATA									GAS HEATING DATA					DX COIL DATA														F
	SERVICE	LOCATION	MFR	MODEL	SYSTEM TYPE	SHIPPING WEIGHT (LBS)	OPERATING WEIGHT (LBS)	L	W	H	AIR FLOW (CFM)	MIN. OUTSIDE AIRFLOW (CFM)	ESP (IN. WG)	ARI-EER	IEER	TYPE	FAN QTY.	FAN HP	FAN BHP	FAN RPM	MOTOR RPM	MOTOR PHASE	MOTOR VOLTS	AIR FLOW (CFM)	ESP (IN. WG)	TYPE	FAN HP	FAN BHP	FAN RPM	MOTOR RPM	MOTOR PHASE	MOTOR VOLTS	TYPE	TOTAL INPUT (MBH)	TOTAL OUTPUT (MBH)	E.A.T. (°F)	L.A.T. (°F)	NO. OF CIRCUITS	COMP. TYPE	TOTAL CAPACITY (MBH)	SENSIBLE CAPACITY (MBH)	NOMINAL TONS	E.A.T. DB (°F)	E.A.T. WB (°F)	L.A.T. DB (°F)	L.A.T. WB (°F)	REFRIG. TYPE	SUCTION LINE SIZE (IN.)	LIQUID LINE SIZE (IN.)	HOT GAS LINE SIZE (IN.)	SEER	THICK-NESS
RTU -																																																			

NOTES:

BOILER SCHEDULE (B)

EQUIP. TAG	GENERAL INFORMATION												PERFORMANCE									ELECTRICAL				NOTES
	SERVICE	LOCATION	MFR	MODEL	TYPE	OPERATING WEIGHT (LBS.)	DIMENSIONS (IN.)			WATER VOLUME (GALLONS)	AIR INLET DIAMETER (IN.)	FLUE OUTLET DIAMETER (IN.)	GAS PRESSURE (IN. WC)	INPUT (MBH)	OUTPUT (MBH)	TURNDOWN RATIO	EWT (°F)	LWT (°F)	MIN / MAX GPM	DESIGN GPM	PRESSURE DROP (PSI)	FLA	VOLTS	HZ	PHASE	
							WIDTH	DEPTH	HEIGHT																	
B -					STAINLESS STEEL FIRE TUBE CONDENSING BOILER																					

NOTES:

PUMP SCHEDULE (P)

EQUIP. TAG	GENERAL INFORMATION							PERFORMANCE							MOTOR				NOTES
	SERVICE	LOCATION	MFR	MODEL	TYPE	MAXIMUM RATED WORKING PRESSURE (PSI)	FLUID TYPE	GPM	HEAD (FT. WC)	NPSHR (FT. WC)	IMPELLER DIAMETER (IN.)	RPM	MINIMUM EFFICIENCY (%)	BHP	HP	VOLTS	HZ	PHASE	
P -																			

NOTES:

AIR SEPARATOR SCHEDULE (AS)

TAG	GENERAL DATA				DIMENSIONAL DATA (INCHES)		PERFORMANCE DATA					NOTES
	SERVICE	LOCATION	MFR	MODEL	DIAMETER	HEIGHT	PRESSURE DROP (FT OF WATER)	MAX FLOW (GPM)	MAXIMUM TEMP (°F)	CV	FLOOD WEIGHT (LBS)	
AS -												
AS -												
AS -												

NOTES:

EXPANSION TANK SCHEDULE (ET)

TAG	GENERAL DATA							DIMENSIONAL DATA (INCHES)		OPERATING PRESSURE		NOTES
	SERVICE	LOCATION	MFR	MODEL	WEIGHT (LBS)	CAPACITY (GALLONS)	ACCEPTANCE CAPACITY (GALLONS)	DIAMETER	HEIGHT	MAXIMUM PSIG	FILL PRESSURE PSIG	
ET -												

NOTES:
1. PRE CHARGED TO 12 PSIG.
2. STEEL SHELL.
3. HEAVY DUTY BUTYL BLADDER
4. MAX. PRESSURE 125 LBS.
5. PRIMER PAINTED EXTERIOR.
6. LIFTING LUGS.
7. FLOOR MOUNTING STAND.
8. ASME CERTIFIED.
9. NTP SYSTEM CONNECTION.
10. CHARGING VALVE CONNECTION.
11. ADDITIONAL ACCEPTABLE MANUFACTURERS: BELL AND GOSSETT, AMTROL, TACO, WESSOLS.

FILL SYSTEM SCHEDULE (FT)

ELARA
30 N. Wolf Rd., Second Floor
Hillside, IL 60162
(708) 236-0300
(708) 236-0330 FAX

ISSUE/REVISION:

REV.	DATE	DESCRIPTION

PROJECT:

_PROJECT NAME

_PROJECT ADDRESS

DRAWING TITLE:

####

DESIGNED BY:	XXX
DRAWN BY:	XXX
CHECKED BY:	XXX
PROJECT NO:	_project number
SCALE:	#/#" = 1'-0"

SHEET NO.

M5.0

##/##/#### XXXXXXXXXXXXXXXXXXXX

PRELIMINARY - NOT FOR CONSTRUCTION

20-75 Ton Packaged Industrial Rooftop

Job Information

Name	**Downer's Grove Library**	Tag	**RTU-1**
Address		Quantity	**1**
Sales Team	**Chicago Main Office**	Model Number	**SXHLF704**
Comments			

Main Cooling

Nominal Capacity	**70 ton Air cooled**	Cooling EDB	**80.00 F**
Cooling EWB	**67.30 F**	Ambient DB	**95.00 F**
Leaving coil DB	**53.69 F**	Leaving coil WB	**52.95 F**
Leaving unit DB	**56.26 F**	Leaving unit WB	**54.00 F**
Gross total capacity	**838.86 MBh**	Gross sensible capacity	**570.66 MBh**
Gross latent capacity	**268.20 MBh**	Net total capacity	**784.84 MBh**
Net sensible capacity	**516.64 MBh**	Net sensible heat ratio	**65.83 %**
Fan motor heat	**54.02 MBh**		

Main Heating

Unit Function	**No Heat, Extended Casing**

Motor/Electrical

Component S P drop	**0.990 in H2O**	Total static pressure	**4.290 in H2O**
Actual supply motor power	**19.75 bhp**	Actual supply fan speed	**1619 rpm**
Exhaust/Return static pressure	**1.000 in H2O**	Actual exhaust/return motor power	**6.49 bhp**
Actual exhaust/return fan speed	**610 rpm**	EER @ AHRI	**10.6 EER**
System power	**82.56 kW**	Min circuit ampacity	**166.27 A**
Max overcurrent protection	**175.00 A**	Min disconnect switch size	**183.00 A**
Recommended dual element	**175.00 A**	Compressor 1 count	**4.00 Each**
Compressor 1 RLA	**25.50 A**	Supply fan motor FLA	**17.70 A**
Supply fan count	**2.00 Each**	Condenser fan FLA	**10.80 A**
Exhaust/return fan motor FLA	**9.70 A**	Other FLA	**2.00 A**
Supply Total Static Pressure	**4.290 in H2O**	IEER @ AHRI	**14.8 EER**
Supply fan efficiency	**64.95 %**	Supply motor count	**2**
Refrig charge (HFC-410A) - ckt 1	**41.5 lb**	Refrig charge (HFC-410A) - ckt 2	**39.8 lb**
Power Supply	**460/60/3**	Supply Fan Hp	**30 hp DDP 80% width**
Supply Fan Drive Selection	**1700 rpm**	Exhaust/Return fan options	**100% -Exhaust 7.5 Hp w/Statitrac**
Exhaust/Return fan drive selection	**600 rpm**	Supply duct static pressure	**2.300 in H2O**
Return duct static pressure	**1.000 in H2O**	Unit mounted power connection	**Unit disconnect switch (nonfused)**
Supply fan type	**DDP 80**		

Hot Gas Reheat

Reheat Setpoint (LUDB in HGRH)	**70.00 F**	Entering DX DB in HGRH	**73.00 F**
Entering DX WB in HGRH	**64.00 F**	Ambient DB in HGRH	**75.00 F**
Ambient WB in HGRH	**68.00 F**		

General

Design airflow	**19000 cfm**	Exhaust/Return Airflow	**18000 cfm**
Filter	**Throwaway Filters**	Outside Air Selection	**0-100% Economizer**
System Control	**VAV (DTC) SF & EF/RF VFD w/o Bypass**	Development Sequence	**R-410A refrigerant**
Economizer Controls	**Econ Control w/comparative enthalpy**	2.00" [51mm] Spring Isolators	**2.00" [51mm] Spring isolators**
Run acoustics	**Yes**	Calculate weights?	**Yes**
Cabinet options	**IRU w/ galv - w/ access doors**	Motor & Shaft Grounding Options	**EISA Std mtrs w/ Shaft grounding ring**
Evaporator face area	**43.00 sq ft**	Evaporator face velocity	**442 ft/min**

Weights

Total installed weight	**11272.2 lb**	Installed point load 1	**866.0 lb**
Installed point load 2	**945.0 lb**	Installed point load 3	**983.4 lb**
Installed point load 4	**1062.4 lb**	Installed point load 5	**1087.5 lb**
Installed point load 6	**1166.5 lb**	Installed point load 7	**1192.7 lb**
Installed point load 8	**1271.8 lb**	Installed point load 9	**1308.9 lb**
Installed point load 10	**1388.0 lb**	COG - Y dimension	**4.99 ft**
COG - X dimension	**17.07 ft**	Installed X dimension 1:	**4.000 in**
Installed X dimension 2:	**101.000 in**	Installed X dimension 3:	**187.000 in**
Installed X dimension 4:	**274.000 in**	Installed X dimension 5:	**370.000 in**
Installed Y dimension 1:	**4.000 in**	Installed Y dimension 2:	**112.000 in**

Acoustics

Supply Duct - 63 Hz	**87 dB**	Supply Duct - 125 Hz	**82 dB**
Supply Duct - 250 Hz	**86 dB**	Supply Duct - 500 Hz	**80 dB**
Supply Duct - 1000 Hz	**77 dB**	Supply Duct - 2000 Hz	**70 dB**
Supply Duct - 4000 Hz	**66 dB**	Supply Duct - 8000 Hz	**64 dB**
Return Duct - 63 Hz	**88 dB**	Return Duct - 125 Hz	**80 dB**
Return Duct - 250 Hz	**88 dB**	Return Duct - 500 Hz	**76 dB**
Return Duct - 1000 Hz	**71 dB**	Return Duct - 2000 Hz	**68 dB**
Return Duct - 4000 Hz	**65 dB**	Return Duct - 8000 Hz	**68 dB**
Outdoor Noise - 63 Hz	**101 dB**	Outdoor Noise - 125 Hz	**96 dB**
Outdoor Noise - 250 Hz	**93 dB**	Outdoor Noise - 500 Hz	**92 dB**
Outdoor Noise - 1000 Hz	**89 dB**	Outdoor Noise - 2000 Hz	**86 dB**
Outdoor Noise - 4000 Hz	**83 dB**	Outdoor Noise - 8000 Hz	**79 dB**

Baseunit Module

Replacement unit	**IPak replacement full perimeter curb**	Ambient control	**Standard ambient control**
Agency approval	**cULus**	Low leak dampers	**Ultra Low Leak Damper**
BAS/network communication module	**BACnet communication interface module**		

Extended Warranties--NACG Terr. Only

Labor warranty (first year)	**1st Year Labor warranty air cooled**	Refrigerant warranty (first year)	**1st Yr Refrigerant Warranty**

Additional Criteria

Min operating weight	**8970.0 lb**	Max operating weight	**12143.0 lb**
Rated capacity at AHRI	**67.50 tons**		

NOTES:
1. VERIFY WEIGHT, CONNECTION, AND ALL DIMENSION WITH INSTALLER DOCUMENTS BEFORE INSTALLATION
2. LOW AMBIENT DAMPER ONLY COMES WITH SELECTED UNIT .
3. OVERALL UNIT WIDTH INCREASES 5/8" BEYOND LIFTING LUG WITH ULTRA LOW LEAK POWER EXHAUST DAMPERS
4. RETURN AIR OPENING CONFIGURATION FOR USES WITH NO AIR OPTION, BAROMETRIC RELIEF, AND EXHAUST FAN.
5. IF FIELD CONVERTING SUPPLY & RETURN OPENING(S) TO HORIZONTAL OR VERTICAL AIRFLOW, FACTORY MUST VERIFY IF UNIT OPTIONS WILL ALLOW IT. FACTORY INSTALLATION IS ALWAYS RECOMMENDED.

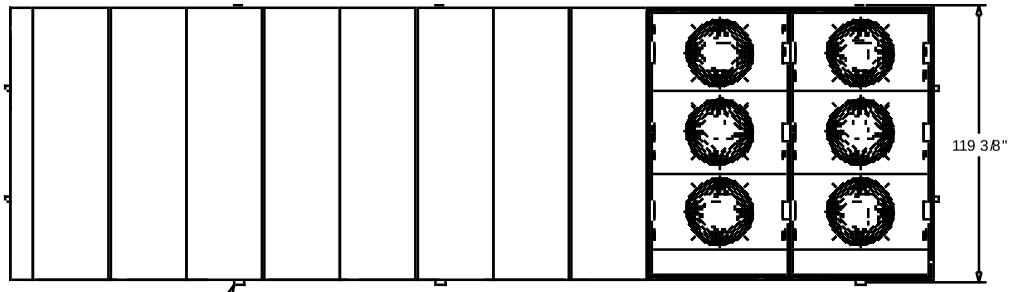

60/70/75 TON PLAN VIEW

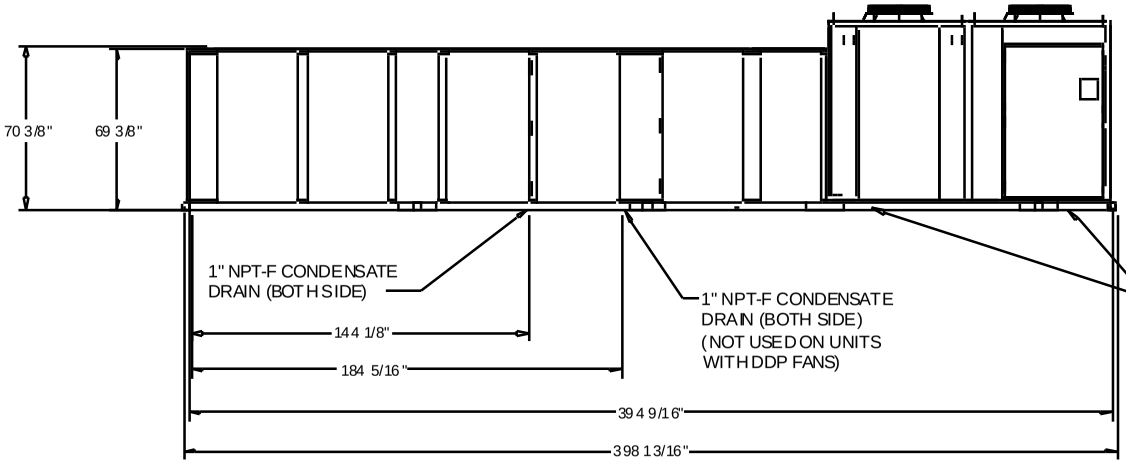

60/70/75 TON LEFT SIDE VIEW

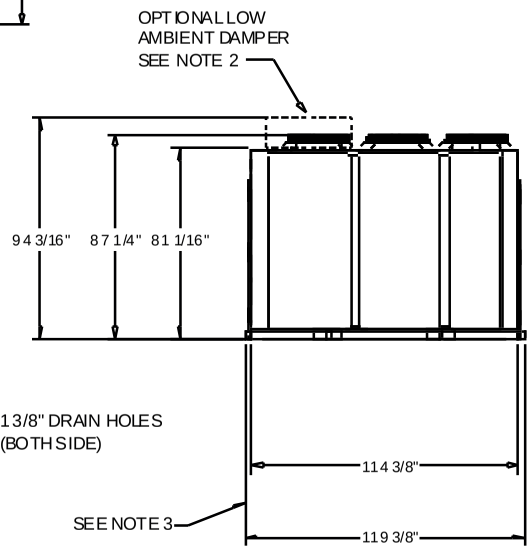

60/70/75 TON FRONT VIEW

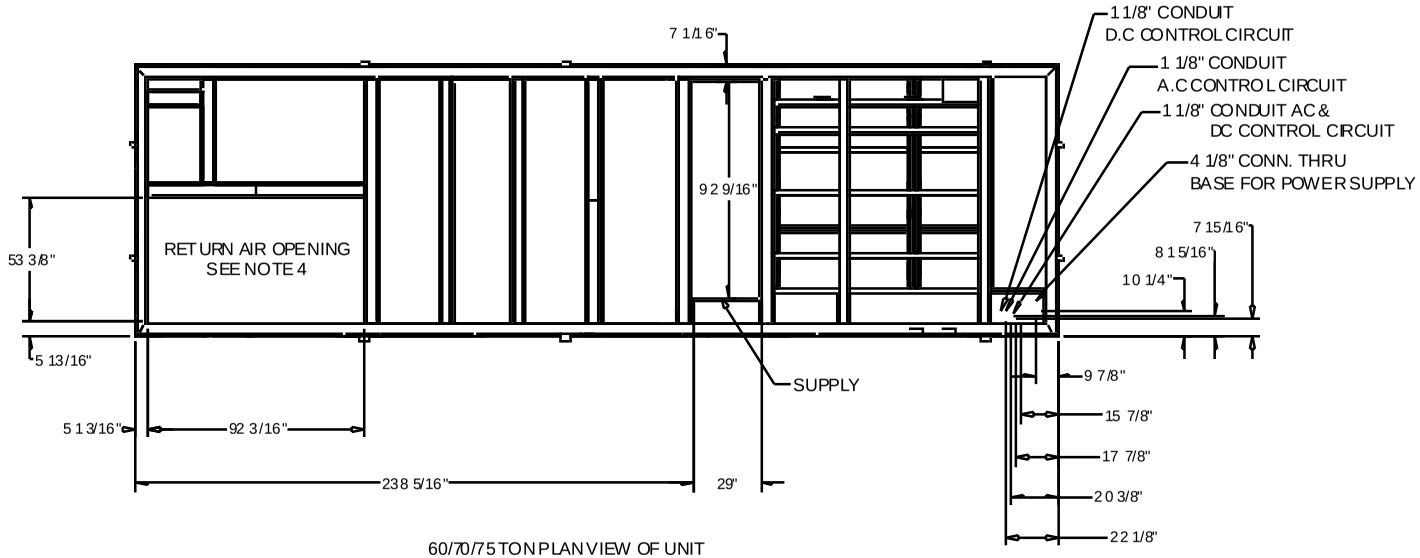

60/70/75 TON PLAN VIEW OF UNIT

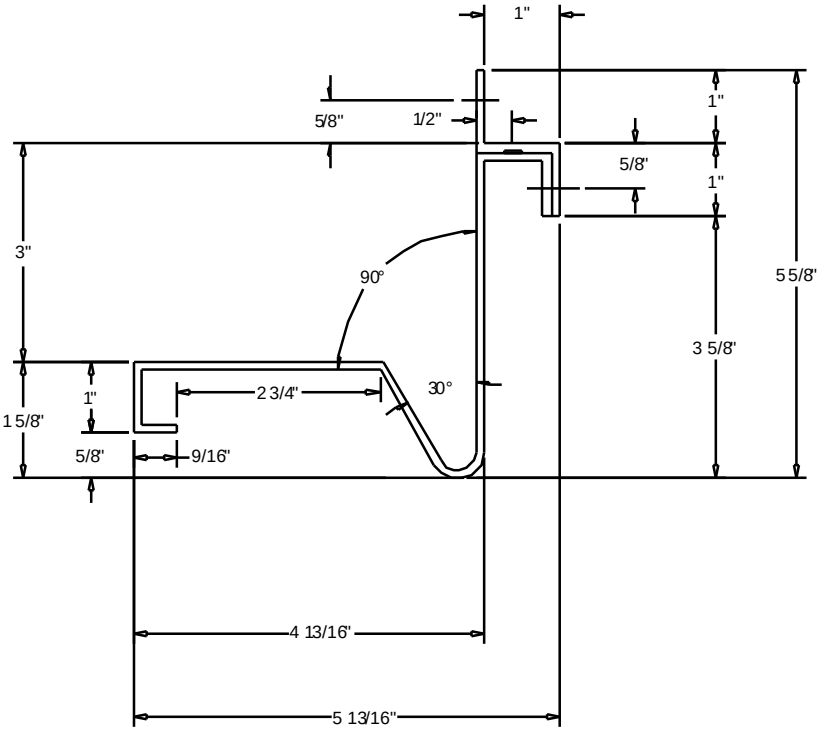

TYPICAL PEDESTAL AND BASE
DIMENSION DRAWING

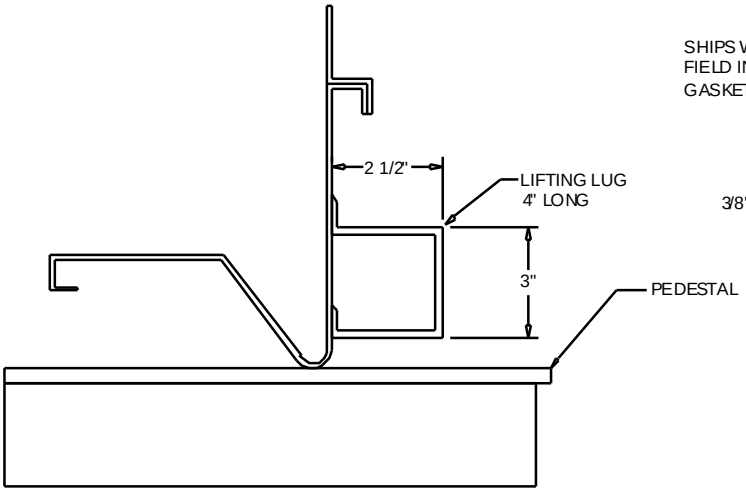

TYPICAL PEDESTAL AND BASE PAN DETAIL
DETAIL

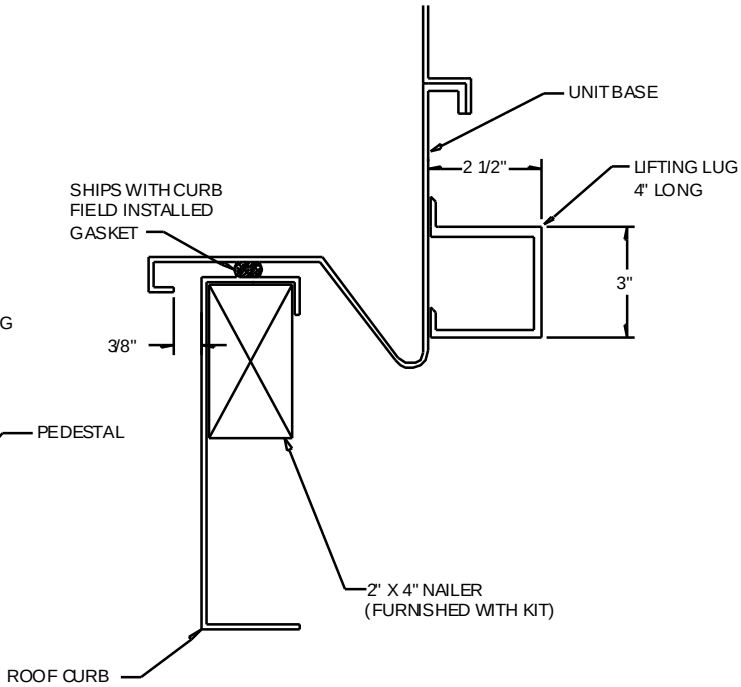

TYPICAL ROOF CURB AND BASE PAN DETAIL
DETAIL

ELECTRICAL / GENERAL DATA

TONS

Model (Tonnage):	SXHLF70 (70Ton)
Unit Operating Voltage Range:	414-506
Unit Primary Voltage:	460
Unit Hertz:	60
Unit Phase:	3
EER:	10.6 EER
IEER:	14.8 EER

GAS HEATING - PERFORMANCE

Heating Input:
Heating Output:
Capacity Steps:

HEATING - GENERAL DATA
Gas inlet pressure: (in w.c.)
Gas Pipe Connection Size:

COMPRESSOR

Compressor 1 Count:	4.00 Each
Compressor 1 RLA:	25.50 A
Compressor 2 Count:	Value not available
Compressor 2 RLA:	Value not available
Compressor 3 Count:	Value not available
Compressor 3 RLA:	Value not available

ELECTRIC HEATER

Electric Heater Kw:
Electric Heater Full Load Amps:

SUPPLY FAN MOTOR

Number of Fans:	2.00 Each
Number of Motors:	2
Total Horsepower:	
Supply Fan Motor Full Load Amps:	17.70 A
Supply Fan Efficiency:	64.95 %

EXHAUST / RETURN FAN MOTOR SECTION

Number:	Value not available
Horsepower (Each):	
Exhaust/Return Fan Motor FLA:	9.70 A

CONDENSER FAN MOTOR

Number:	6
Horsepower (each):	1.0
Condenser Fan Motor Full Load Amps (Total):	10.8

EVAPORATIVE CONDENSER (7)

Pump Horsepower:	N/A
Pump Full Load Amps:	N/A
Sump Heater Full Load Amps:	N/A
Sump Heater kW:	N/A

FILTERS - TYPE

Type:	
Furnished:	YES
Number:	35
Recommended Size:	16" x20" x2"

PREFILTERS
Furnished:
Number:
Recommended Size:

REFRIGERANT TYPE (6)

Charge Type:	R-410A
Factory Charge (Circuit #1):	41.5 lb
Factory Charge (Circuit #2):	39.8 lb

FINAL FILTERS - TYPE

Type:
Furnished:
Number:
Recommended Size:

PREFILTERS
Furnished:
Number:
Recommended Size:

Notes:
1. LOAD 1=Current of the largest motor (compressor or fan motor); LOAD 2=Sum of the currents of all remaining motors; LOAD 3 =Current of electric heaters LOAD 4 =Control Power Transformer (20-40 and 24-48 ton units add 3 FL amps for wire sizing formula, 50-75 and 59 - 89 ton units add 6 FL amps)
2. For Electric Heat MCA, MOP, RDE values, calculate for both cooling and heating modes. (When determining LOADS, the compressors do not operate when the unit is in heating mode) (On 70-89 ton single source units, heating Load 4 = 12 amps on 200,230 volt units and 9 amps on 460,575 volt units)
3. If selected Max Over Cur is less than the Min Clr Amp, then select the lowest maximum fuse size which is equal to or larger than the Min Cir Amp, provided the selected fuse size does not exceed 800 amps.
4. If the selected Recommended Dual Element fuse size is greater than the selected Max Over Cur Protection value, then select the Recommended Dual Element fuse size value to equal the Max Over Protection value.
5. Compressor KW at AHRI rating conditions of 80/67 - 95
6. Refrigerant charge is an approx. value. For a more precise value, see unit nameplate and service instructions.
7. Sump Heater is an optional feature.

Note:
When 2 or more units are to be placed side by side, the distance between the units should be increased to 150% of the recommended single unit clearance. The units should also be staggered to reduce span deflection & assure proper diffusion of exhaust air.

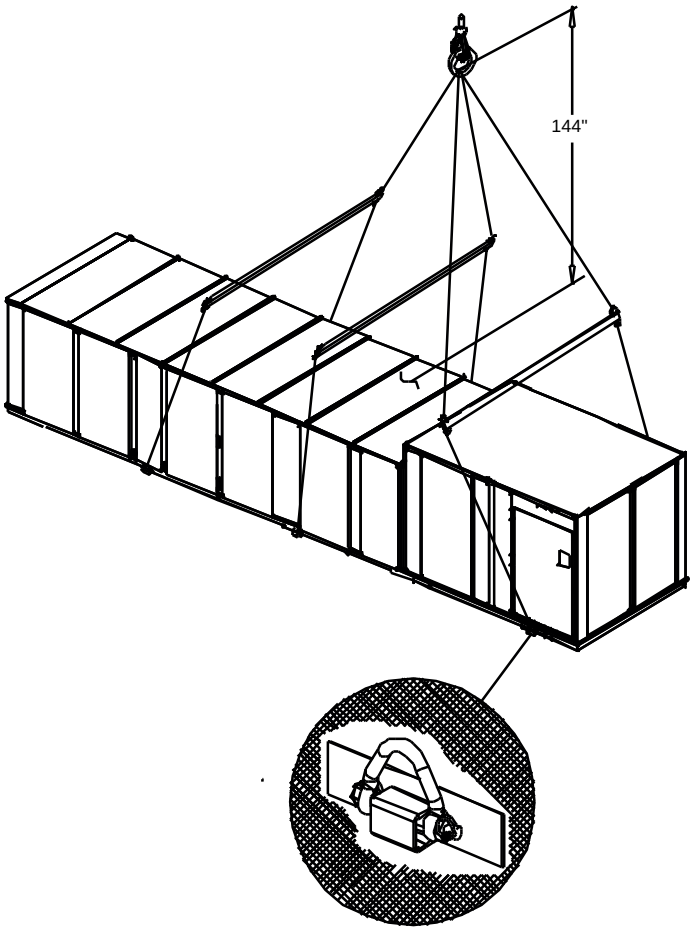

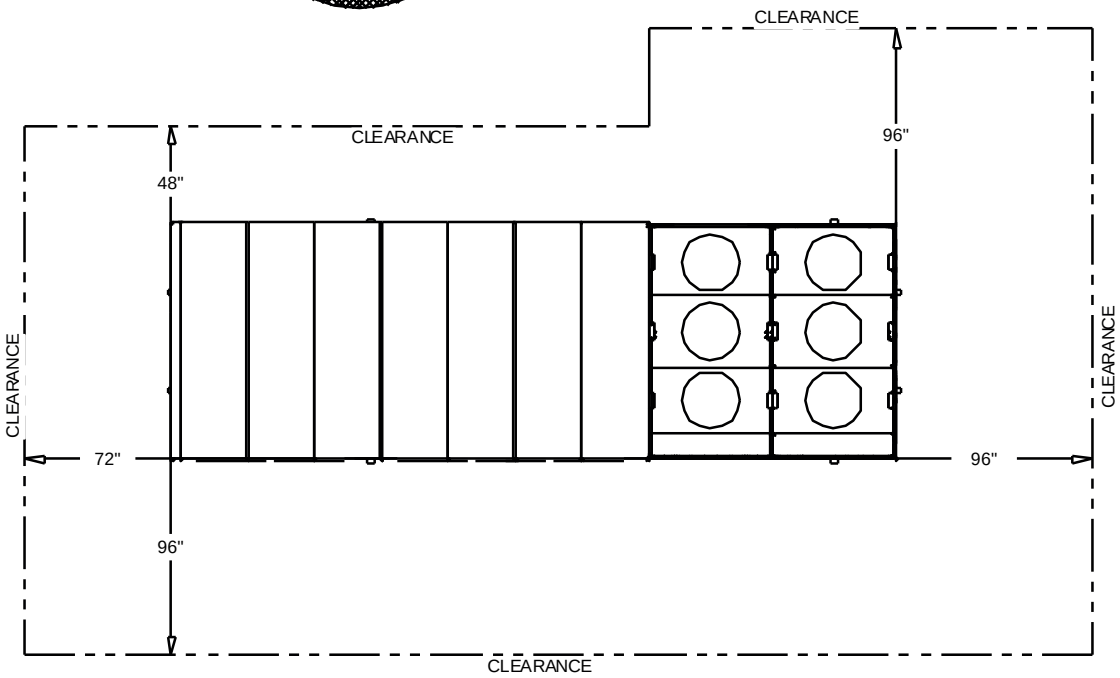

RIGGING AND CLEARANCE

AIR COOLED DRAWING

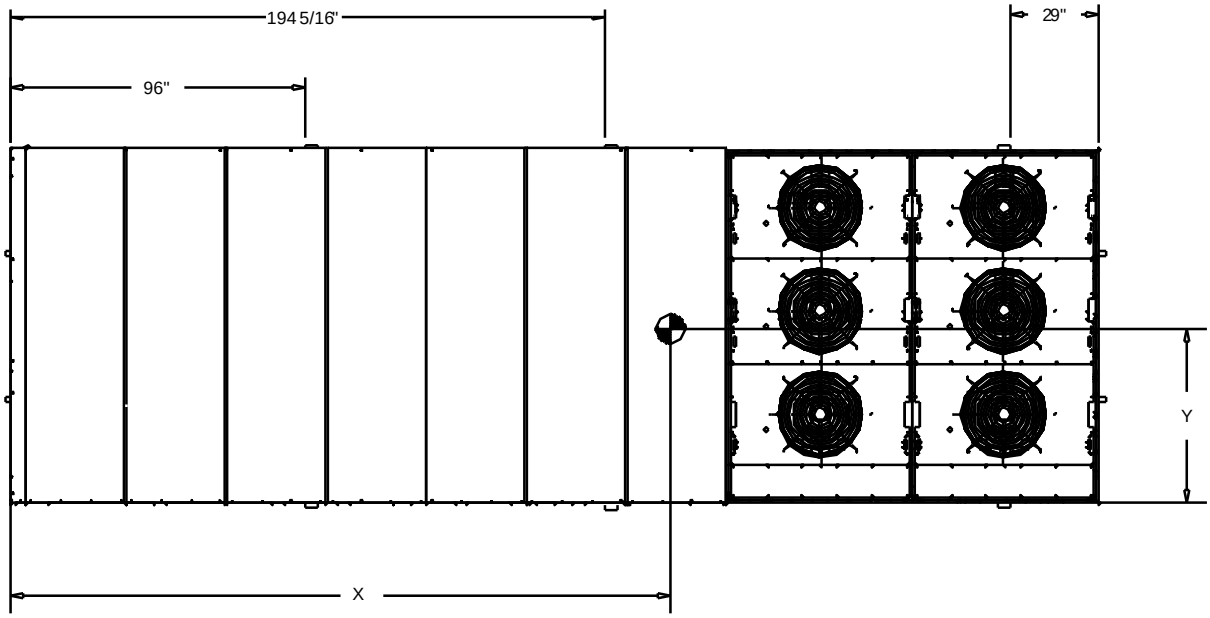

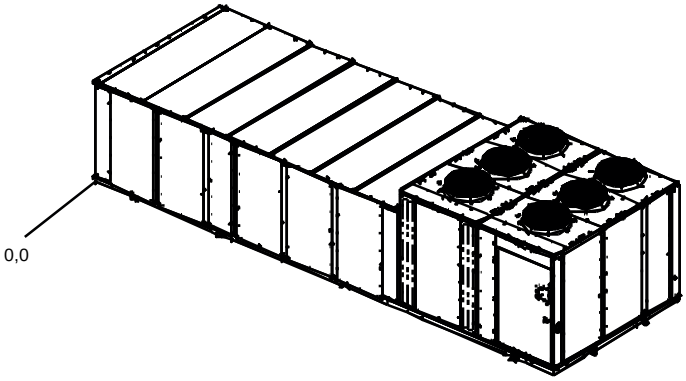

Center of Gravity X:	17.07 ft	Point load X location 1:	4.000 in
Center of Gravity Y:	4.99 ft	Point load X location 2:	101.000 in
		Point load X location 3:	187.000 in
Point Load 1:	866.0 lb	Point load X location 4:	274.000 in
Point Load 2:	945.0 lb	Point load X location 5:	370.000 in
Point Load 3:	983.4 lb	Point load X location 6:	N/A
Point Load 4:	1062.4 lb	Point load X location 7:	N/A
Point Load 5:	1087.5 lb	Point load X location 8:	N/A
Point Load 6:	1166.5 lb	Point load X location 9:	N/A
Point Load 7:	1192.7 lb	Point load X location 10:	N/A
Point Load 8:	1271.8 lb	Point load Y location 1:	4.000 in
Point Load 9:	1308.9 lb	Point load Y location 2:	112.000 in
Point Load 10:	1388.0 lb		
Total Weight:	11272.2 lb		
Added Weight			
1. Double wall : (3)	N/A		

Notes:
1. The actual weight is stamped on the unit nameplate.
2. The weight shown represents the typical unit operating weight for the configuration selected. Estimated at +/- 10% of the nameplate weight. .
3. Add weight to the total unit weight.
4. Design Special weights are not displayed. Any weight added through COD (Custom Order Design) will not be accounted in the +/- 10% estimate
5. When 2 or more units are to be placed side by side, the distance between the units should be increased to 150% of the recommended single unit clearance. The units should also be staggered to reduce span deflection & assure proper diffusion of exhaust air.

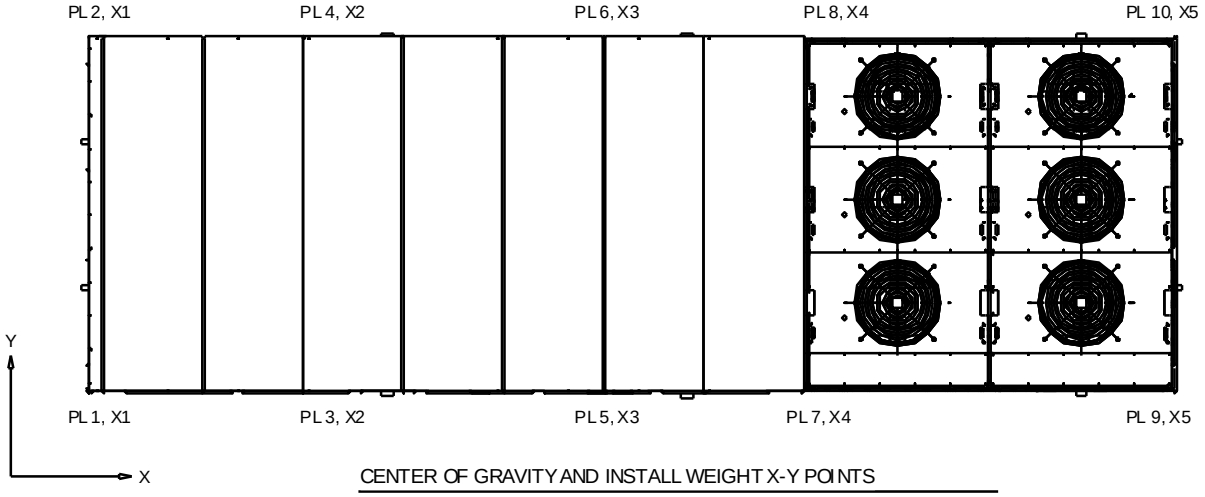

CENTER OF GRAVITY AND INSTALL WEIGHT X-Y POINTS

AIR COOLED DRAWING

⚠ WARNING

HAZARDOUS VOLTAGE!

DISCONNECT ALL ELECTRIC POWER INCLUDING REMOTE DISCONNECTS AND FOLLOW LOCK OUT AND TAG PROCEDURES BEFORE SERVICING. INSURE THAT ALL MOTOR CAPACITORS HAVE DISCHARGED STORED VOLTAGE. UNITS WITH VARIABLE SPEED DRIVE, REFER TO DRIVE INSTRUCTIONS FOR CAPACITOR DISCHARGE.

FAILURE TO DO THE ABOVE BEFORE SERVICING COULD RESULT IN DEATH OR SERIOUS INJURY.

⚠ AVERTISSEMENT

TENSION DANGEREUSE!

COUPER TOUTES LES TENSIONS ET OUVRIR LES SECTIONNEURS A DISTANCE, PUIS SUIVRE LES PROCEDURES DE VERROUILLAGE ET DES ETIQUETTES AVANT TOUTE INTERVENTION. VERIFIER QUE TOUS LES CONDENSATEURS DES MOTEURS SONT DECHARGES. DANS LE CAS D'UNITES COMPORTANT DES ENTRAINEMENTS A VITESSE VARAIBLE, SE REPORTER AUX INSTRUCTIONS DE L'ENTRAINEMENT POUR DECHARGER LES CONDENSATEURS.

NE PAS RESPECTER CES MESURES DE PRECAUTION PEUT ENTRAINER DES BLESSURES GRAVES POUVANT ETRE MORTELLES.

⚠ ADVERTENCIA

¡VOLTAJE PELIGROSO!

DESCONECTE TODA LA ENERGIA ELECTRICA, INCLUSO LAS DESCONEXIONES REMOTAS Y SIGA LOS PROCEDIMIENTOS DE CIERRE Y ETIQUETADO ANTES DE PROCEDER AL SERVICIO. ASEGURESE DE QUE TODOS LOS CAPACITORES DEL MOTOR HAYAN DESCARGADO EL VOLTAJE ALMACENADO. PARA LAS UNIDADES CON EJE DE DIRECCION DE VELOCIDAD VARIABLE, CONSULTE LAS INSTRUCCIONES PARA LA DESCARGA DEL CONDENSADOR.

EL NO REALIZAR LO ANTERIORMENTE INDICADO, PODRIA OCASIONAR LA MUERTE O SERIAS LESIONES PERSONALES.

CAUTION

USE COPPER CONDUCTORS ONLY!

UNIT TERMINALS ARE NOT DESIGNED TO ACCEPT OTHER TYPES OF CONDUCTORS.

FAILURE TO DO SO MAY CAUSE DAMAGE TO THE EQUIPMENT.

ATTENTION

N'UTILISER QUE DES CONDUCTEURS EN CUIVRE!

LES BORNES DE L'UNITE NE SONT PAS CONCUES POUR RECEVOIR D'AUTRES TYPES DE CONDUCTEURS.

L'UTILISATION DE TOUT AUTRE CONDUCTEUR PEUT ENDOMMAGER L'EQUIPEMENT.

PRECAUCION

¡UTILICE UNICAMENTE CONDUCTORES DE COBRE!

LAS TERMINALES DE LA UNIDAD NO ESTAN DISENADAS PARA ACEPTAR OTROS TIPOS DE CONDUCTORES.

SI NO LO HACE, PUEDE OCASIONAR DANO AL EQUIPO.

IMPORTANT!

DO NOT ENERGIZE UNIT UNTIL CHECK-OUT AND START-UP PROCEDURE HAS BEEN COMPLETED.

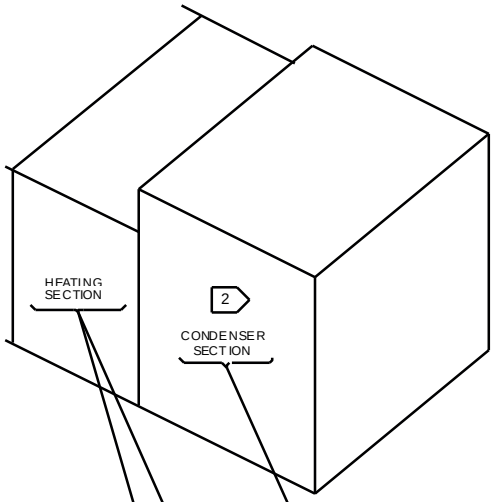

DEVICE PREFIX LOCATION CODE	
AREA	LOCATION
1	INSIDE UNIT CONTROL BOX
2	CONDENSER SECTION
3	AIR HANDLER SECTION
4	HEATING SECTION
5	EXTERNAL FIELD MOUNTED DEVICE

Note:
All wiring and components shown dashed to be supplied and installed by the customer in accordance with local electrical codes.

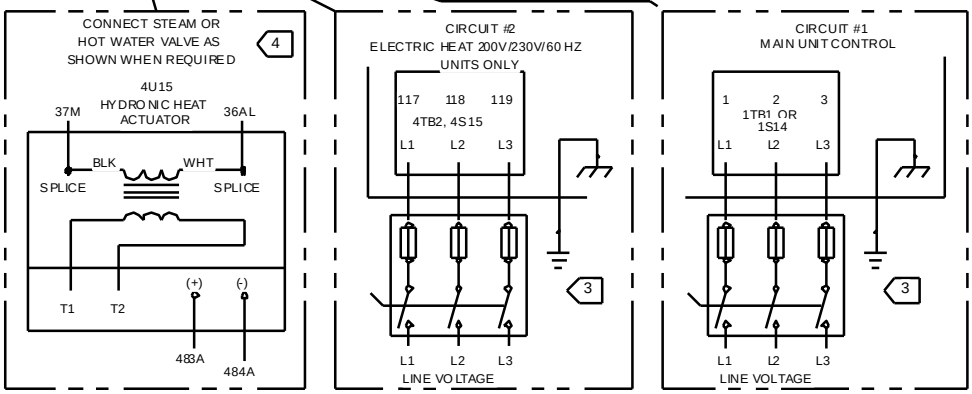

NOTES:

1. ALL WIRING AND COMPONENTS SHOWN DASHED TO BE SUPPLIED AND INSTALLED BY THE CUSTOMER IN ACCORDANCE WITH LOCAL ELECTRICAL CODES.
2. CUSTOMER CONNECTIONS - MAIN UNIT CONTROL (CIRCUIT #1) - ARE LOCATED IN THE CONDENSER SECTION FOR 20 THRU 75 TON UNITS.
3. SEE CUSTOMER CONNECTION WIRE RANGE TABLE FOR ACCEPTABLE WIRE SIZES FOR CONNECTION TO MAIN UNIT TERMINAL BLOCK (1TB1/4TB2) OR DISCONNECT SWITCH (1S14/4S15).
4. WIRES TO THE OPTIONAL STEAM AND/OR HOT WATER HEAT VALVE ARE SUPPLIED WITH THE UNIT. WIRE CONNECTIONS TO THE VALVE TO BE MADE BY THE CUSTOMER.
6. OPTIONAL 5U57 REMOTE ZONE TEMP SENSOR IS USED FOR UNOCCUPIED HEAT/COOL TEMP CONTROL SENSING.
7. WHEN 5U69 REMOTE ZONE TEMP SENSOR IS USED, REMOVE 5U58 INTERGRAL ZONE TEMP SENSOR ATTACHED TO TERMINALS S1 AND S2.
8. WIRES USE SHIELDED TWISTED PAIR WIRE.
9. USE SHIELDED TWISTED PAIR WIRE. WRAP SHIELDS WITH TAPE TO PREVENT CONTACT WITH GROUND.
10. REMOVE JUMPER (1TB4-15 & 1TB4-16) AND INSTALL HIGH DUCT TEMP T-STAT /OR FIELD SUPPLIED DEVICE.
11. REMOVE JUMPER (1TB4-17 & 1TB4-18) WHEN FIELD SUPPLIED EXTERNAL AUTO/STOP SWITCH (5S67) IS INSTALLED.
12. CHANGEOVER (5K87) AVAILABLE ONLY ON HYDRONIC HEAT UNITS OR MODULATING GAS HEAT UNITS.
13. ALARM OUTPUT SWITCHES ON ANY MANUAL RESET DIAGNOSTIC.
14. OPTIONAL HEAT MODULE AUX. TEMP (5RT16) IS USED FOR MORNING WARM-UP CONTROL ON UNITS WITH HEATING OPTION.
15. TERMINAL BLOCK 1TB17 AND ASSOCIATED WIRING REQUIRED WITH GBAS (1U51) OPTION. DEMAND LIMIT RELAY (5K89) TO BE PROVIDED BY CUSTOMER.
16. VENTILATION OVERRIDE MODE CONTACTS RATED 12MA @ 24VDC MINIMUM (5K90 - 5K91 - 5K92 - 5K93 - 5K94) TO BE PROVIDED BY CUSTOMER.
17. WIRE NODES 533 & 534 REQUIRED WITH BAS/NETWORK COMM MODULE (1U54) OPTION. USE SHIELDED TWISTED PAIR WIRE.
18. FIELD CONNECTIONS TO DRIVE VAV BOXES FULL OPEN DURING NIGHT SETBACK MODE.
19. 15A FUSE REPLACEMENT IS REQUIRED FOR 50 THRU 60 TON - 0.50 KVA TRANSFORMER WITH 200V - 230V - 460V OR 575V UNIT VOLTAGE.
    20A FUSE REPLACEMENT IS REQUIRED FOR 50 THRU 60 TON - 0.50 KVA TRANSFORMER WITH 380V OR 415V UNIT VOLTAGE.
21. CONTACTS RATED 12 MA @ 24VDC MINIMUM.
22. CONNECT TO 24VAC CLASS 2 CIRCUITS ONLY.
23. REMOVE JUMPER WHEN OPTIONAL FIELD SUPPLIED OUTSIDE AIR SENSOR (3RT3) IS INSTALLED AND THE UNIT DOES NOT HAVE ECONOMIZER.
24. FIELD SUPPLIED AND INSTALLED OCCUPIED/UNOCCUPIED CONTACTS (5K86) FOR USE ON UNITS WITHOUT REMOTE PANEL WITH NIGHT SETBACK (5U58).
25. GBAS 0-5V OPTION CONNECTIONS.
26. GBAS 0-10V OPTION CONNECTIONS.
27. FOR GBAS INPUTS AI1-AI4, "GBAS 0-5V" REQUIRES 0-5V VDC AND "GBAS 0-10V" REQUIRES 0-10VDC.
28. "ACTIVE DIAGNOSTICS (BO5)" APPEARS WITH BOTH "GBAS 0-5V" AND "GBAS 0-10V".
29. SEE FUSE REPLACEMENT TABLE ON VFD PANEL FOR VFD POWER FUSES (F40, F41, F42).
30. SWITCH A53, LOCATED ON THE VFD, MUST BE SET TO "U" (OFF).

FUSE REPLACEMENT TABLE

CONDENSER FAN FUSE 1F1 THRU 1F6 CLASS RK5	UNIT VOLTAGE	200	230	380	415	460	575
	TIME DELAY	25A	25A	15A	15A	15A	15A

CONTROL POWER FUSE

CONTROL (1T1) TRANSFORMER RATING		0.25 KVA	0.30 KVA	0.50 KVA	0.75 KVA	1.00 KVA	1.50 KVA
1F7 CLASS CC - TYPE FNQ-R	20-30 TON	6.25A	6.25A	--	10A	--	--
	40 TON	15A	20A	--	20A	--	--
	50-60 TON	--	--	15A	--	20A	--
	70-75 TON	--	--	--	--	15A	20A

ELECTRIC HEAT FUSE	4F19 THRU 4F36, 4F46, 47, 48	CLASS K5	60A
COMPRESSOR PROTECTION FUSE	1F44 & 1F45	TYPE MTH	6A
TRANSFORMER CIRCUIT FUSE	1F72 THRU 1F74	TYPE FNQ-R	15A

VFD PROTECTION FUSES (CLASS "T" FUSES) OPTIONAL SUPPLY VFD 1F57 - 1F62, OPTIONAL EXHAUST / RETURN VFD 1F63-1F65

BELT DRIVE MOTOR 20-130 UNITS	UNIT VOLTAGE	FUSE RATING	3 HP	5 HP	7.5 HP	10 HP	15 HP	20 HP	25 HP	30 HP	40 HP	50 HP
	200V/60/3	600V	40A	60A	80A	100A	150A	200A	225A	300A	350A	N/A
	230V/60/3	600V	30A	45A	70A	90A	125A	175A	200A	250A	300A	N/A
	380V/50/3	600V	15A	30A	45A	50A	90A	100A	125A	150A	200A	N/A
	415V/50/3	600V	15A	30A	45A	50A	90A	100A	125A	150A	200A	N/A
	460V/60/3	600V	15A	25A	35A	45A	60A	90A	100A	125A	150A	200A
	575V/60/3	600V	15A	15A	25A	35A	50A	70A	60A	100A	125A	175A

OPTIONAL DIRECT DRIVE MOTOR 20-59 UNITS	UNIT VOLTAGE	FUSE RATING	3 HP	5 HP	7.5 HP	10 HP	15 HP 1K-1.6K RPM	15 HP 1.7K-2.4K RPM	20 HP	25 HP	30 HP
	200V/60/3	600V	40A	60A	80A	100A	150A	150A	200A	225A	300A
	230V/60/3	600V	25A	45A	70A	90A	125A	125A	175A	200A	250A
	460V/60/3	600V	15A	25A	35A	45A	70A	60A	90A	100A	125A
	575V/60/3	600V	15A	15A	25A	35A	50A	50A	70A	80A	100A

OPTIONAL DIRECTMDIVE MOTOR 60-89 TON	UNIT VOLTAGE	FUSE RATING	10HP	15 HP 1K-1.6K RPM	15 HP 1.7K-2.4K RPM	20HP	30 HP 1K-1.6K RPM	30 HP 1.7-2.4K RPM	40HP	50HP
	200V/60/3	600V	125A	175A	150A	200A	300A	150A	350A	N/A
	230V/60/3	600V	95A	150A	125A	175A	250A	250A	300A	N/A
	460V/60/3	600V	45A	70A	60A	90A	125A	125A	150A	200A
	575V/60/3	600V	40A	60A	50A	70A	125A	100A	125A	175A

CUSTOMER CONNECTION WIRE RANGE

NOTES:

A. BLOCK SIZE & DISCONNECT SIZE ARE CALCULATED BY SELECTING THE SIZE GREATER THAN OR EQUAL TO 1.15 X (SUM OF UNIT LOADS). SEE UNIT LITERATURE FOR UNIT LOAD VALUES.

UNITS WITH MAIN POWER TERMINAL BLOCK (ALL VOLTAGES)			UNITS WITH MAIN POWER DISCONNECT SWITCH (ALL VOLTAGES)		
BLOCK SIZE	WIRE QTY	CONNECTOR WIRE RANGE	DISCONNECT SIZE	WIRE QTY	CONNECTOR WIRE RANGE
335 AMP	(1)	#6 - 350 MCM	100 AMP	(1)	#14 - 1/0
760 AMP	(2)	#4 - 500 MCM	250 AMP	(1)	#4 - 350 kcmil
840 AMP	(2)	#2 - 600 MCM	400 AMP	(1) OR	#1 - 600 kcmil OR
				(2)	#1 - 250 kcmil
			600 AMP	(2)	250 - 500 MCM
			1000 AMP	(3)	3/0 - 500 kcmil

OPTIONAL CONVENIENCE OUTLET FUSE 1F55 AND 1F56 (TIME DELAY TYPE FNQ-R FUSE)	200V/60/3	230V/60/3	380V/50/3	415V/50/3	460V/60/3	575V/60/3
	12A	10A	N/A	N/A	5A	4A

⚠ WARNING

HAZARDOUS VOLTAGE!

DISCONNECT ALL ELECTRIC POWER INCLUDING REMOTE DISCONNECTS AND FOLLOW LOCK OUT AND TAG PROCEDURES BEFORE SERVICING. INSURE THAT ALL MOTOR CAPACITORS HAVE DISCHARGED STORED VOLTAGE. UNITS WITH VARIABLE SPEED DRIVE, REFER TO DRIVE INSTRUCTIONS FOR CAPACITOR DISCHARGE.

FAILURE TO DO THE ABOVE BEFORE SERVICING COULD RESULT IN DEATH OR SERIOUS INJURY.

⚠ AVERTISSEMENT

TENSION DANGEREUSE!

COUPER TOUTES LES TENSIONS ET OUVRIR LES SECTIONNEURS A DISTANCE, PUIS SUIVRE LES PROCEDURES DE VERROUILLAGE ET DES ETIQUETTES AVANT TOUTE INTERVENTION. VERIFIER QUE TOUS LES CONDENSATEURS DES MOTEURS SONT DECHARGES. DANS LE CAS D'UNITES COMPORTANT DES ENTRAINEMENTS A VITESSE VARAIBLE, SE REPORTER AUX INSTRUCTIONS DE L'ENTRAINEMENT POUR DECHARGER LES CONDENSATEURS.

NE PAS RESPECTER CES MESURES DE PRECAUTION PEUT ENTRAINER DES BLESSURES GRAVES POUVANT ETRE MORTELLES.

⚠ ADVERTENCIA

¡VOLTAJE PELIGROSO!

DESCONECTE TODA LA ENERGIA ELECTRICA, INCLUSO LAS DESCONEXIONES REMOTAS Y SIGA LOS PROCEDIMIENTOS DE CIERRE Y ETIQUETADO ANTES DE PROCEDER AL SERVICIO. ASEGURESE DE QUE TODOS LOS CAPACITORES DEL MOTOR HAYAN DESCARGADO EL VOLTAJE ALMACENADO. PARA LAS UNIDADES CON EJE DE DIRECCION DE VELOCIDAD VARIABLE, CONSULTE LAS INSTRUCCIONES PARA LA DESCARGA DEL CONDENSADOR.

EL NO REALIZAR LO ANTERIORMENTE INDICADO, PODRIA OCASIONAR LA MUERTE O SERIAS LESIONES PERSONALES.

CAUTION

USE COPPER CONDUCTORS ONLY!

UNIT TERMINALS ARE NOT DESIGNED TO ACCEPT OTHER TYPES OF CONDUCTORS.

FAILURE TO DO SO MAY CAUSE DAMAGE TO THE EQUIPMENT.

ATTENTION

N'UTILISER QUE DES CONDUCTEURS EN CUIVRE!

LES BORNES DE L'UNITE NE SONT PAS CONCUES POUR RECEVOIR D'AUTRES TYPES DE CONDUCTEURS.

L'UTILISATION DE TOUT AUTRE CONDUCTEUR PEUT ENDOMMAGER L'EQUIPEMENT.

PRECAUCION

IUTILICE UNICAMENTE CONDUCTORES DE COBRE!

LAS TERMINALES DE LA UNIDAD NO ESTAN DISENADAS PARA ACEPTAR OTROS TIPOS DE CONDUCTORES.

SI NO LO HACE, PUEDE OCASIONAR DANO AL EQUIPO.

IMPORTANT!

DO NOT ENERGIZE UNIT UNTIL CHECK-OUT AND START-UP PROCEDURE HAS BEEN COMPLETED.

DEVICE PREFIX LOCATION CODE	
AREA	LOCATION
1	INSIDE UNIT CONTROL BOX
2	CONDENSER SECTION
3	AIR HANDLER SECTION
4	HEATING SECTION
5	EXTERNAL FIELD MOUNTED DEVICE

Note:
All wiring and components shown dashed to be supplied and installed by the customer in accordance with local electrical codes.

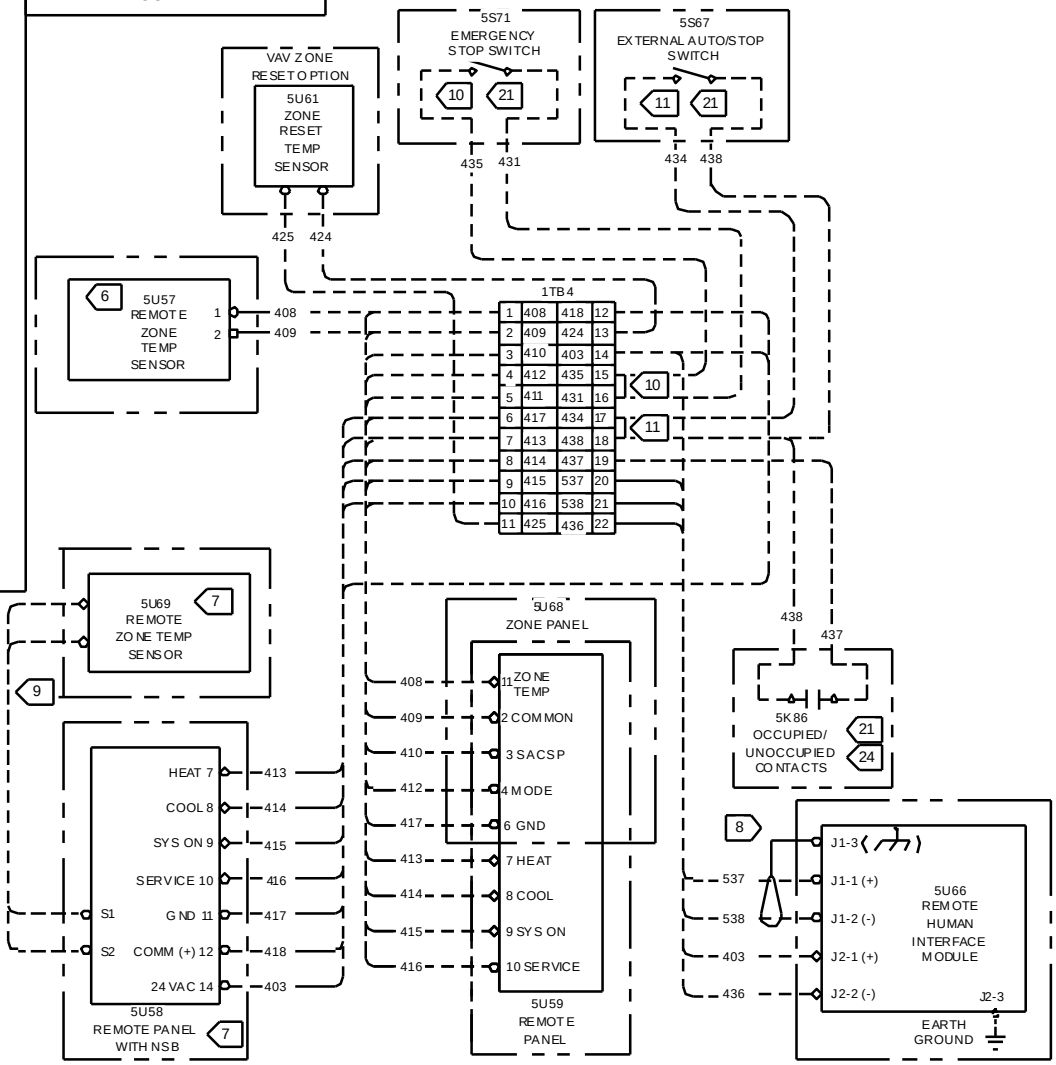

⚠ WARNING

HAZARDOUS VOLTAGE!

DISCONNECT ALL ELECTRIC POWER INCLUDING REMOTE DISCONNECTS AND FOLLOW LOCK OUT AND TAG PROCEDURES BEFORE SERVICING. INSURE THAT ALL MOTOR CAPACITORS HAVE DISCHARGED STORED VOLTAGE. UNITS WITH VARIABLE SPEED DRIVE, REFER TO DRIVE INSTRUCTIONS FOR CAPACITOR DISCHARGE.

FAILURE TO DO THE ABOVE BEFORE SERVICING COULD RESULT IN DEATH OR SERIOUS INJURY.

⚠ AVERTISSEMENT

TENSION DANGEREUSE!

COUPER TOUTES LES TENSIONS ET OUVRIR LES SECTIONNEURS A DISTANCE, PUIS SUIVRE LES PROCEDURES DE VERROUILLAGE ET DES ETIQUETTES AVANT TOUTE INTERVENTION. VERIFIER QUE TOUS LES CONDENSATEURS DES MOTEURS SONT DECHARGES. DANS LE CAS D'UNITES COMPORTANT DES ENTRAINEMENTS A VITESSE VARAIBLE, SE REPORTER AUX INSTRUCTIONS DE L'ENTRAINEMENT POUR DECHARGER LES CONDENSATEURS.

NE PAS RESPECTER CES MESURES DE PRECAUTION PEUT ENTRAINER DES BLESSURES GRAVES POUVANT ETRE MORTELLES.

⚠ ADVERTENCIA

¡VOLTAJE PELIGROSO!

DESCONECTE TODA LA ENERGIA ELECTRICA, INCLUSO LAS DESCONEXIONES REMOTAS Y SIGA LOS PROCEDIMIENTOS DE CIERRE Y ETIQUETADO ANTES DE PROCEDER AL SERVICIO. ASEGURESE DE QUE TODOS LOS CAPACITORES DEL MOTOR HAYAN DESCARGADO EL VOLTAJE ALMACENADO. PARA LAS UNIDADES CON EJE DE DIRECCION DE VELOCIDAD VARIABLE, CONSULTE LAS INSTRUCCIONES PARA LA DESCARGA DEL CONDENSADOR.

EL NO REALIZAR LO ANTERIORMENTE INDICADO, PODRIA OCASIONAR LA MUERTE O SERIAS LESIONES PERSONALES.

CAUTION

USE COPPER CONDUCTORS ONLY!

UNIT TERMINALS ARE NOT DESIGNED TO ACCEPT OTHER TYPES OF CONDUCTORS.

FAILURE TO DO SO MAY CAUSE DAMAGE TO THE EQUIPMENT.

ATTENTION

N'UTILISER QUE DES CONDUCTEURS EN CUIVRE!

LES BORNES DE L'UNITE NE SONT PAS CONCUES POUR RECEVOIR D'AUTRES TYPES DE CONDUCTEURS.

L'UTILISATION DE TOUT AUTRE CONDUCTEUR PEUT ENDOMMAGER L'EQUIPEMENT.

PRECAUCION

IUTILICE UNICAMENTE CONDUCTORES DE COBRE!

LAS TERMINALES DE LA UNIDAD NO ESTAN DISENADAS PARA ACEPTAR OTROS TIPOS DE CONDUCTORES.

SI NO LO HACE, PUEDE OCASIONAR DANO AL EQUIPO.

IMPORTANT!

DO NOT ENERGIZE UNIT UNTIL CHECK-OUT AND START-UP PROCEDURE HAS BEEN COMPLETED.

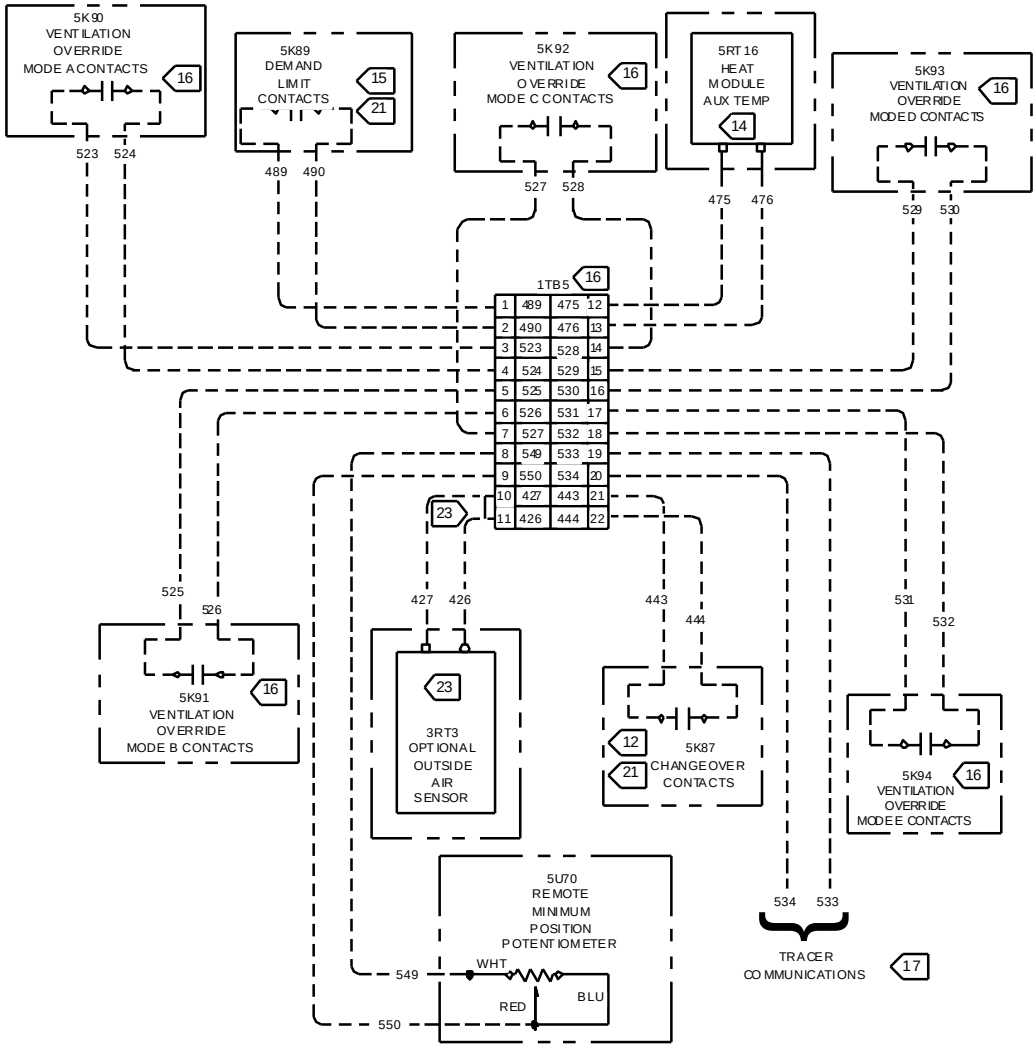

DEVICE PREFIX LOCATION CODE	
AREA	LOCATION
1	INSIDE UNIT CONTROL BOX
2	CONDENSER SECTION
3	AIR HANDLER SECTION
4	HEATING SECTION
5	EXTERNAL FIELD MOUNTED DEVICE

Note:
All wiring and components shown dashed to be supplied and installed by the customer in accordance with local electrical codes.

⚠ WARNING

HAZARDOUS VOLTAGE!

DISCONNECT ALL ELECTRIC POWER INCLUDING REMOTE DISCONNECTS AND FOLLOW LOCK OUT AND TAG PROCEDURES BEFORE SERVICING. INSURE THAT ALL MOTOR CAPACITORS HAVE DISCHARGED STORED VOLTAGE. UNITS WITH VARIABLE SPEED DRIVE, REFER TO DRIVE INSTRUCTIONS FOR CAPACITOR DISCHARGE.

FAILURE TO DO THE ABOVE BEFORE SERVICING COULD RESULT IN DEATH OR SERIOUS INJURY.

⚠ AVERTISSEMENT

TENSION DANGEREUSE!

COUPER TOUTES LES TENSIONS ET OUVRIR LES SECTIONNEURS A DISTANCE, PUIS SUIVRE LES PROCEDURES DE VERROUILLAGE ET DES ETIQUETTES AVANT TOUTE INTERVENTION. VERIFIER QUE TOUS LES CONDENSATEURS DES MOTEURS SONT DECHARGES. DANS LE CAS D'UNITES COMPORTANT DES ENTRAINEMENTS A VITESSE VARAIBLE, SE REPORTER AUX INSTRUCTIONS DE L'ENTRAINEMENT POUR DECHARGER LES CONDENSATEURS.

NE PAS RESPECTER CES MESURES DE PRECAUTION PEUT ENTRAINER DES BLESSURES GRAVES POUVANT ETRE MORTELLES.

⚠ ADVERTENCIA

¡VOLTAJE PELIGROSO!

DESCONECTE TODA LA ENERGIA ELECTRICA, INCLUSO LAS DESCONEXIONES REMOTAS Y SIGA LOS PROCEDIMIENTOS DE CIERRE Y ETIQUETADO ANTES DE PROCEDER AL SERVICIO. ASEGURESE DE QUE TODOS LOS CAPACITORES DEL MOTOR HAYAN DESCARGADO EL VOLTAJE ALMACENADO. PARA LAS UNIDADES CON EJE DE DIRECCION DE VELOCIDAD VARIABLE, CONSULTE LAS INSTRUCCIONES PARA LA DESCARGA DEL CONDENSADOR.

EL NO REALIZAR LO ANTERIORMENTE INDICADO, PODRIA OCASIONAR LA MUERTE O SERIAS LESIONES PERSONALES.

CAUTION

USE COPPER CONDUCTORS ONLY!

UNIT TERMINALS ARE NOT DESIGNED TO ACCEPT OTHER TYPES OF CONDUCTORS.

FAILURE TO DO SO MAY CAUSE DAMAGE TO THE EQUIPMENT.

ATTENTION

N'UTILISER QUE DES CONDUCTEURS EN CUIVRE!

LES BORNES DE L'UNITE NE SONT PAS CONCUES POUR RECEVOIR D'AUTRES TYPES DE CONDUCTEURS.

L'UTILISATION DE TOUT AUTRE CONDUCTEUR PEUT ENDOMMAGER L'EQUIPEMENT.

PRECAUCION

IUTILICE UNICAMENTE CONDUCTORES DE COBRE!

LAS TERMINALES DE LA UNIDAD NO ESTAN DISENADAS PARA ACEPTAR OTROS TIPOS DE CONDUCTORES.

SI NO LO HACE, PUEDE OCASIONAR DANO AL EQUIPO.

IMPORTANT!

DO NOT ENERGIZE UNIT UNTIL CHECK-OUT AND START-UP PROCEDURE HAS BEEN COMPLETED.

DEVICE PREFIX LOCATION CODE	
AREA	LOCATION
1	INSIDE UNIT CONTROL BOX
2	CONDENSER SECTION
3	AIR HANDLER SECTION
4	HEATING SECTION
5	EXTERNAL FIELD MOUNTED DEVICE

Note:
All wiring and components shown dashed to be supplied and installed by the customer in accordance with local electrical codes.

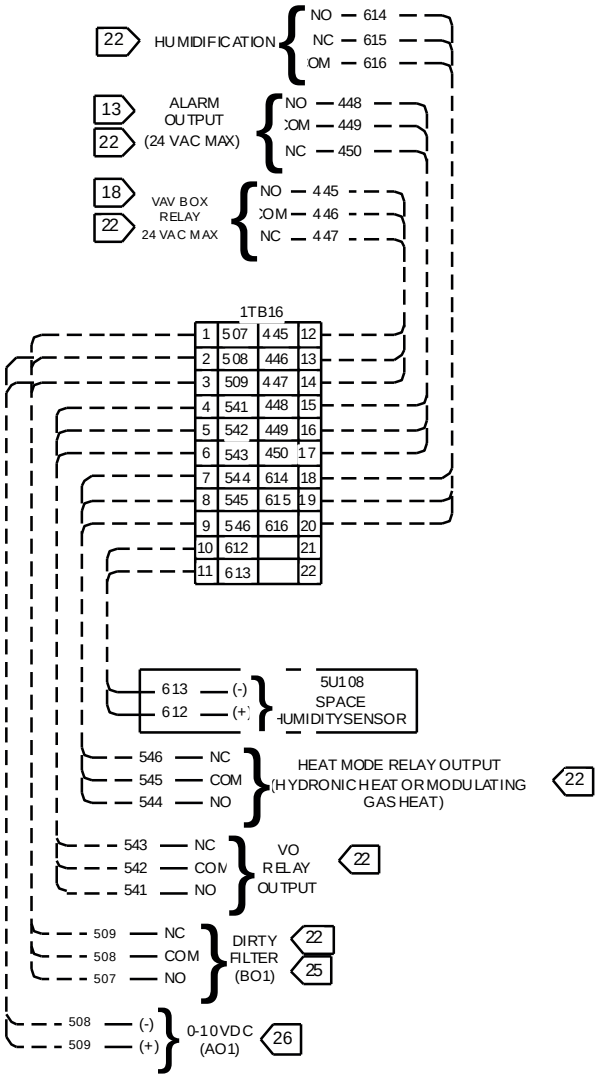

DANFOSS VARIABLE FREQUENCY DRIVE PROGRAMMING PARAMETERS			
MENU	PARAMETER	DESCRIPTION	SETTING
LOAD/MOTOR	1-21	MOTOR POWER	SET ONLY FOR APPLICATIONS USING 3HP HIGH EFFICIENCY MOTORS
	1-22	MOTOR VOLTAGE	SET ONLY FOR 200/230V 60HZ 380/415V 50HZ APPLICATIONS
	1-24	MOTOR CURRENT	SET BASED ON MOTOR NAMEPLATE
	1-25	MOTOR NOMINAL SPEED	1800 RPM
	1-73	FLYING START	ENABLED
BRAKES	2-01	DC BRAKE CURRENT	0%
REFERENCE/ RAMPS	3-15	REFERENCE 1 SOURCE	ANALOG INPUT 53 30
	3-41	RAMP 1 RAMP UP TIME	30 SECONDS
	3-42	RAMP 1 RAMP DOWN TIME	30 SECONDS
LIMITS/ WARNINGS	4-12	MOTOR SPEED LOW LIMIT	22HZ
	4-18	CURRENT LIMIT	100% RATED CURRENT
DIGITAL IN/OUT	5-40[0]	FUNCTION RELAY 1	NO ALARM
	5-40[1]	FUNCTION RELAY 2	RUNNING
SPECIAL FUNCTIONS	14-01	SWITCHING FREQUENCY	4.5KHZ
	14-12	FUNCTION AT MAINS IMBALANCE	DERATE
	14-20	RESET MODE	AUTOMATIC RESET X 3
	14-60	FUNCTION AT OVER TEMPERATURE	DERATE

General - R410A
Units shall be specifically designed for outdoor rooftop installation on a roof curb and be completely factory assembled and tested, piped, internally wired, fully charged with R-410A compressor oil and shipped in one piece. Units shall be available for direct expansion cooling only, or direct expansion cooling with natural gas, electric, hot water or steam heating. Filters, outside air system, exhaust air system, optional non-fused disconnect switches and all operating and safety controls shall be furnished factory installed. All units shall be cULus approved and factory run tested. Cooling capacity shall be rated in accordance with AHRI Standard 360. All units shall have decals and tags to aid in service and indicate caution areas. Electrical diagrams shall be printed on long life water resistant material and shall ship attached to control panel doors.

Casing
Exterior panels shall be zinc coated galvanized steel, phosphatized and painted with a slate grey air-dry finish durable enough to withstand a minimum of 672 hours consecutive salt spray application in accordance with standard ASTM B117. Screws shall be coated with zinc-plus-zinc chromate. Heavy gauge steel hinged access panels with tiebacks to secure door in open position shall provide access to filters and heating sections. Refrigeration components, supply air fan and compressor shall be accessible through removable panels as standard. Unit control panel, filter section, and gas heating section shall be accessible through hinged access panels as standard. Optional Double Wall Construction hinged access doors shall provide access to filters, return/exhaust air, heating and supply fan section. All access doors and panels shall have neoprene gaskets. Interior surfaces or exterior casing members shall have 1/2" Tuf-Skin fiberglass insulation. Unit base shall be watertight with heavy gauge formed load bearing members, formed recess and curb overhang. Unit lifting lugs shall accept chains or cables for rigging. Lifting lugs shall also serve as unit tiedown points.

IntelliPak Replacement Unit (IRU)
The IntelliPak replacement solution shall include a condenser base pan, strengthening of the condenser section with welded reinforcement of condenser base rail, as well as welded integral supports to the condenser base. This additional strength shall allow the reuse of the existing pedestal as well as any Trane full perimeter curb and reduce installation risk and labor. Also optional with stainless steel.

Hinged Access Doors
Hinged access doors shall provide easy access to supply fan, filters, exhaust/return fan, and heating section.These access doors shall feature double wall construction with dual density insulation sandwiched between heavy gauge galvanized steel panels for strength and durability

Air-Cooled Condenser Coil - R410A
Condenser coils shall have all Aluminum Microchannel coils. All coils shall be leak tested at the factory to ensure pressure integrity. The condenser coil is pressure tested to 650psig Subcooling circuit(s) shall be provided as standard.
.

Condenser Fans and Motors
All condenser fans shall be vertical discharge, direct drive fans, statically balanced, with steel blades and zinc plated steel hubs. Condenser fan motors shall be three-phase motors with permanently lubricated ball bearings, built-in current and thermal overload protection and weathertight slingers over motor bearings.

Evaporator Coil - R410A
Internally enhanced copper tubing of 3/8" or 1/2" O.D. shall be mechanically bonded to heavyduty aluminum fins of configured design. All coils shall be equipped with thermal expansion valves and factory pressure and leak tested.

Compressors - R410A
The Trane Scroll compressor shall be industrial grade, direct drive 3600 RPM maximum speed scroll type. The motor shall be suction gas-cooled hermetic design. Compressor shall have centrifugal oil pump with dirt separator, oil sight glass, and oil charging valve. Compressor shall also be provided with thermostatic motor winding temperature control to protect against excessive motor temperatures resulting from over-/under-voltage or loss of charge, high and low pressure cutouts, and reset relay.

Phase Monitor
Shall protect 3-phase equipment from phase loss, phase reversal, and low voltage. Any fault condition shall produce a Failure Indicator LED, and send the unit into an emergency stop condition. cULus approved. (Standard on 20-75T units)

Supply Fan
Supply fan motors shall be either open drip-proof or enclosed fan cooled. All supply fans shall be dynamically balanced in factory. Supply fan shall be test run in unit and shall reach rated rpm. All 60 Hz supply fan motors meet the Energy Independence Security Act of 2007 (EISA). All 50 Hz supply fan motors meet the U.S. Energy Policy Act of 1992 (EPACT).

Direct-Drive Plenum Supply Fan
Supply fan shall be [one] [two] single width, single inlet 9-blade plenum fan. Fan blades shall be aluminum backward-inclined airfoil. Plenum fans shall be direct-driven. Entire assembly shall be completely isolated from unit and fan board by 2" deflection spring isolation. Multiple fan widths shall be available to optimize efficiency. Fan shall not require routine maintenance such as fan bearing lubrication, belt tensioning and replacement, sheave alignment, and setscrew torque checks.

Variable Frequency Drive
Unit shall include factory-installed and tested variable frequency drive[s] (VFD) to provide motor speed modulation. The VFD shall receive a 0-10VDC speed signal from the unit controller. The drive will respond to the signal by accelerating or decelerating to maintain the controlling set point (duct static, space pressure, etc). VFD shall also include the following features:

1. Designed, constructed, and tested in accordance with NEMA ICS, NFPA, and IEC standards and housed in a plastic IP20 enclosure.
2. DC link reactors on both the positive and negative rails of the DC bus equal to 3% impedance to minimize power line harmonics.
3. Full rated output current continuously - 110% of rated current for 60 seconds and 160% of rated current for up to 0.5 second while starting.
4. Isolation between the Drive's power circuitry and control circuitry to ensure operator safety and to protect connected electronic control equipment
   from damage caused by voltage spikes, current surges, and ground loop currents.

5. Audible noise reduction through automatic adjustment of the carrier frequency and frequency avoidance.

6. Rated at 40C with a standard operating range of -10 to 50C (14 to 124F) ambient temperatures and 0 to 95% relative humidity

7. Self-diagnostics and motor protections such as: cULus listed overload, phase loss, and internal thermal overload.

8. Off/Stop and Auto/Start selector switches to start and stop the AC Drive and determine the speed reference.

a. On units with bypass, an AC Drive/Off/Bypass hand selector switch shall be provided in the unit control box

b. In DRIVE mode speed reference shall be provided by a 0-10 VDC analog input

9. A keypad interface which shall be programmable by language and feature multiple lines for easy reading.

10. Controlled and/or accessible points such as AC Drive Start/Stop, speed reference, and fault diagnostics.

11. Meter points such as motor power in HP, motor power in kW, motor kW-hr, motor current, motor voltage, hours run, DC link voltage, thermal load

on motor, Thermal load on AC Drive and Heatsink temperature.

12. Troubleshooting features such as:

a. AC Drive memory storage of the last 10 faults and related operational data

b. Four simultaneous displays: frequency or speed, run time, output amps and output power

c. Keypad which shall display: Reference Signal Value, Output Frequency in Hz or percent, Output Amps, Motor HP, Motor kW, kW

13. Coated circuit boards for protection against corrosive environments

14. Field readable BACnet points to allow for communication of stauts, setpoints and diagnostics to the BAS.

Internal Shaft Grounding Ring
Motors shall have internal bearing protection for use with VFDs.

Two-inch Spring Isolators
Supply and Exhaust/Return fan (if applicable) assemblies shall be isolated with two-inch nominal deflection to reduce transmission of vibrations

Modulating 100 Percent Exhaust Fan with Statitrac Control
Two, double-inlet, forward-curved fans shall be mounted on a common shaft with fixed sheave drive. All fans shall be dynamically balanced and tested in factory before being installed in unit. Exhaust fan shall be test run as part of unit final run test. Unit shall reach rated rpm before fan shaft passes through first critical speed. Fan shaft shall be mounted on two grease lubricated ball bearings designed for 200,000-hour average life. Optional extended grease lines shall be provided to allow greasing of bearings from unit filter section. Fan motor and assembly shall be mounted on common base to allow consistent belt tension with no relative motion between fan and motor shafts. Entire assembly shall be completely isolated from unit and fan board by double deflection, rubber in shear isolators or spring isolation on motor sizes larger than five hp. For both CV and VAV rooftops, the 100 percent modulating exhaust discharge dampers (or VFD) shall be modulated in response to building pressure. A differential pressure control system, (Statitrac), shall use a differential pressure transducer to compare indoor building pressure to outdoor ambient atmospheric pressure. The FC exhaust fan shall be turned on when required to lower building static pressure setpoint. The (Statitrac) control system shall then modulate the discharge dampers (or VFD) to control the building pressure to within the adjustable, specified dead band that shall be adjustable at the Human Interface Panel. All 60 Hz exhaust fan motors meet the Energy Independence Security Act of 2007 (EISA).

0-100 percent modulating economizer
Operated through the primary temperature controls to automatically utilize OA for "free" cooling. Automatically modulated return and OA dampers shall maintain proper temperature in the conditioned space. Economizer shall be equipped with an automatic lockout when the outdoor high ambient temperature is too high for proper cooling. Minimum position control shall be standard and adjustable at the Human Interface Panel or with a remote potentiometer or through the building management system. A spring return motor shall ensure closure of OA dampers during unit shutdown or power interruption. Mechanical cooling shall be available to aid the economizer mode at any ambient. Low leak economizer dampers shall be standard with a leakage rate of 2.5 percent of nominal airflow (400 CFM/ton) at 1" wg. static pressure.

Economizer Control with Comparative Enthalpy
Two enthalpy sensors shall be provided to compare total heat content of the indoor air and outdoor air to determine the most efficient air source when economizing.

Ultra-Low Leak Damper

Economizer return and fresh air dampers shall be provided with horizontal airfoil blades and spring-return actuators. The economizer shall have a functional life of 60,000 opening and closing cycles. Dampers shall be AMCA 511 Class 1A certified with a maximum leakage rate of 3 CFM/sqft at 1.0 inWC pressure differential thus exceeding requirements of ASHRAE 90.1-2013, California Title 24-2013, and IECC-2012. Fault Detection and Diagnostic (FDD) control will also be provided with Ultra Low Leak Economizers. FDD control monitors the commanded position of the economizer compared to the feedback position of the damper. If the damper position is outside +/- 10% of the commanded position, a diagnostic is generated.

Ultra-Low Leak motorized exhaust dampers will be provided when the Ultra-Low Leak Economizer is ordered with an exhaust/return option that includes motorized dampers. Ultra Low Leak motorized exhaust dampers will be AMCA 511 Class 1A certified with a maximum leakage rate of 3 CFM/sq-ft at 1.0 inWC pressure differential. This exceeds the most stringent requirements of ASHRAE 90.1 and IECC (4 CFM/sq-ft at 1.0 inWC pressure differential).

Throwaway Filter, MERV 4

Filters are 2" thick, UL Class 2, glass fiber type. Filters rated at 80% average synthetic dust weight arrestance when tested in accordance with ASHRAE 52-76 and 52.1 test methods. Filters mounted in galvanized steel rack.

Unit Controller

DDC microprocessor controls shall be provided to control all unit functions. The control system shall be suitable to control CV or VAV applications. The controls shall be factory-installed and mounted in the main control panel. All factory-installed controls shall be fully commissioned (run tested) at the factory. The unit shall have a Human Interface Panel with a 16 key keypad, a 2 line X 40 character clear English display as standard to provide the operator with full adjustment and display of control data functions. The unit controls shall be used as a stand-alone controller, or as part of a building management system involving multiple units.

1

The unit shall be equipped with a complete microprocessor control system. This system shall consist of temperature and pressure (thermistor and transducer) sensors, printed circuit boards (modules), and a unit mounted HumanInterface Panel. Modules (boards) shall be individually replaceable for ease of service. All microprocessors, boards and sensors shall be factory mounted, wired and tested. The microprocessor boards shall be stand-alone DDC controls not dependent on communications with an on-site PC or a Building Management Network. The microprocessors shall be equipped with on-board diagnostics, indicating that all hardware, software and interconnecting wiring are
in proper operating condition. The modules (boards) shall be protected to prevent RFI and voltage transients from affecting the board's circuits. All field wiring shall be terminated at separate, clearly marked terminal strip. Direct field wiring to the I/O boards is not acceptable. The microprocessor's memory shall be non-volatile EEPROM type requiring no battery or capacitive backup, while maintaining all data.

2

Zone sensors shall be available in several combinations with selectable features depending on sensor.

3

The Human Interface Panel's keypad display character format shall be 40 characters x 2 lines. The character font shall be 5 x 7 dot matrix plus cursor. The display shall be Supertwist Liquid Crystal Display (LCD) with blue characters on a ray/green background which provides high visibility and ease of interface. The display format shall be in clear English. Two or three digit coded displays are not acceptable.

4

The keypad shall be equipped with 16 individual touch-sensitive membrane key switches. The switches shall be divided into four separate sections and be password protected from change by unauthorized personnel. The six main menus shall be STATUS, SETPOINTS, DIAGNOSTICS, SETUP, CONFIGURATION and SERVICE MODE.

BACnet Communication Interface Module

Option shall provide control and monitoring of the rooftop by Tracer SC or a 3rd party building management system utilizing BACnet protocol.

Unit Interrupt Rating (Standard Short Circuit Current Rating-SCCR)
A 5,000 Amp rating shall be applied to the unit enclosure using a non-fused circuit breaker for disconnect switch purposes. Fan motors, compressors, and electric heat circuits shall be provided with series rated circuit breakers that will provide the unit rated level of protection. The unit shall be marked with approved cULus markings and will adhere to cULus regulations.

Non-Fused Disconnect Switch with External Handle
External handle SHALL enable the operator to disconnect unit power with the control box door closed for safety.

Certified AHRI Performance
Packaged Rooftop units cooling, heating capacities and efficiencies are rated within the scope of the Air-Conditioning, Heating & Refrigeration Institute (AHRI) Certification Program and display the AHRI Certified® mark as a visual confirmation of conformance to the certification sections of AHRI Standard 340-360 (I-P) and ANSIZ21.47 and 10 CFR Part 431 pertaining to Commercial Warm Air Furnaces. The applications in this catalog specifically excluded from the AHRI certification program are:
-Ventilation modes
-Heat Recovery.
-Units larger than nominal 63 tons in Cooling
-Evaporative Condensers

RTU-1

2-2707DPLA01FN

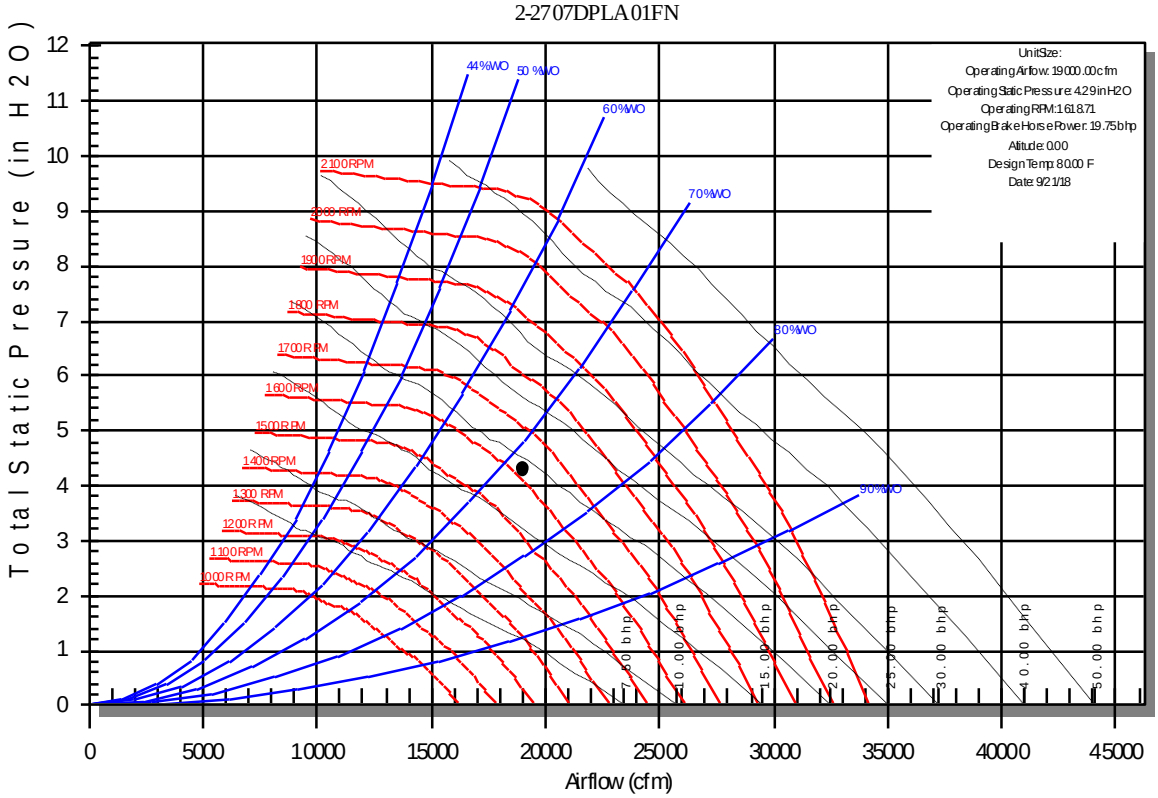

RTU-1

	63Hz	125Hz	250Hz	500Hz	1 kHz	2 kHz	4 kHz	8 kHz
Outdoor Noise:	101	96	93	92	89	86	83	79
Supply Duct:	87	82	86	80	77	70	66	64
Return Duct:	88	80	88	76	71	68	65	68

90-130 ton Packaged Industrial Rooftop

Job Information

Name	**Downer's Grove Library**	Tag	**RTU-2**
Address		Quantity	**1**
Sales Team	**Chicago Main Office**	Model Number	**SXHKC904**
Comments			

Main Cooling

Nominal Capacity	**90 Ton**	Cooling EDB	**79.20 F**
Cooling EWB	**67.10 F**	Ent air relative humidity	**53.63 %**
Ambient temp	**95.00 F**	Leaving coil DB	**55.27 F**
Leaving coil WB	**54.57 F**	Leaving unit DB	**58.66 F**
Leaving unit WB	**55.97 F**	Gross total capacity	**1152.43 MBh**
Gross sensible capacity	**801.94 MBh**	Gross latent capacity	**350.49 MBh**
Net total capacity	**1050.28 MBh**	Net sensible capacity	**699.79 MBh**
Net sensible heat ratio	**66.63 %**	Fan motor heat	**102.15 MBh**

Main Heating

Unit Type	**SX: No Heat Extended Casing**

Motor/Electrical

Component S P drop	**1.343 in H2O**	Total static pressure	**5.343 in H2O**
Actual supply motor power	**36.54 bhp**	Supply fan RPM	**1288 rpm**
Exhaust static pressure	**0.900 in H2O**	Actual exhaust motor power	**14.38 bhp**
Actual exhaust fan speed	**611 rpm**	System power	**119.42 kW**
EER @ design	**0.0 EER**	EER @ AHRI	**11.0 EER**
Min circuit ampacity	**241.90 A**	Max overcurrent protection	**250.00 A**
Min disconnect switch size	**267.00 A**	Recommended dual element	**250.00 A**
Compressor 1 count	**4.00 Each**	Compressor 1 RLA	**37.20 A**
Compressor 2 count	**0.00 Each**	Compressor 2 RLA	**0.00 A**
Supply fan motor FLA	**24.70 A**	Supply fan count	**2.00 Each**
Condenser fan FLA	**14.40 A**	Exhaust fan motor FLA	**18.00 A**
Other FLA	**2.00 A**	IEER @ AHRI	**15.4 EER**
Power Supply	**460/60/3**	Supply duct static pressure	**3.100 in H2O**
Return duct static pressure	**0.900 in H2O**	Exhaust	**100% - 15 Hp w/Statitrac**
Exhaust fan drive selection	**600 rpm**	Supply Fan Hp	**40 Hp (2-20 Hp Motors)**
Supply fan drive selection	**1300 rpm**	Unit mounted power connection	**Unit Disconnect Switch (Nonfused)**

General

Design airflow	**30000 cfm**	Exhaust fan airflow	**28000 cfm**
Filter	**Throwaway Filters**	Outside Air Selection	**0-100% Economizer**
System Control	**VAV (DTC) with SF VFD w/o bypass**	High cap evap / high eff cond coil	**High cap evap coil & high eff cond coil**
Cabinet options	**IRU w Galv with access doors**	Economizer Controls	**Econ control w/comparative enthalpy**
R22 Developement Sequence	**R-410A refrigerant**	Evaporator face area	**59.30 sq ft**
Evaporator rows	**6.00 Each**	Evaporator fin spacing	**148 Per Foot**
Condenser rows	**0.00 Each**	Condenser fin spacing	**0 Per Foot**

HFCF-410A refrigerant charge - circuit 1	**64.8 lb**	HFCF-410A refrigerant charge - circuit 2	**64.8 lb**

Weights			
Installed point load 1	**1476.8 lb**	Installed point load 2	**1475.4 lb**
Installed point load 3	**1489.0 lb**	Installed point load 4	**1487.7 lb**
Installed point load 5	**1499.0 lb**	Installed point load 6	**1497.7 lb**
Installed point load 7	**1508.9 lb**	Installed point load 8	**1507.6 lb**
Installed point load 9	**1518.1 lb**	Installed point load 10	**1516.7 lb**
Total weight	**14977.0 lb**	COG - X dimension	**17.51 ft**
COG - Y dimension	**5.83 ft**	Installed X dimension 1:	**4.000 in**
Installed Y dimension 1:	**4.000 in**	Installed X dimension 2:	**120.000 in**
Installed Y dimension 2:	**136.000 in**	Installed X dimension 3:	**215.000 in**
Installed X dimension 4:	**309.000 in**	Installed X dimension 5:	**396.000 in**

Base Unit Module			
Agency Approval	**cULus**	Low Leak Dampers	**Ultra low leak damper w/ FDD**
BAS/network communication module	**BACnet communication interface module**	Isolators	**Spring isolators**

Extended Warranties--NACG Terr. Only			
Labor Warranty (First Year)	**Year 1 Labor Warranty Cooling Only**	Refrigerant Warranty (First Year)	**1st Year Refrigerant Warranty**

NOTES:
1. VERIFY WEIGHT, CONNECTION, AND ALL DIMENSION WITH INSTALLER DOCUMENTS BEFORE INSTALLATION

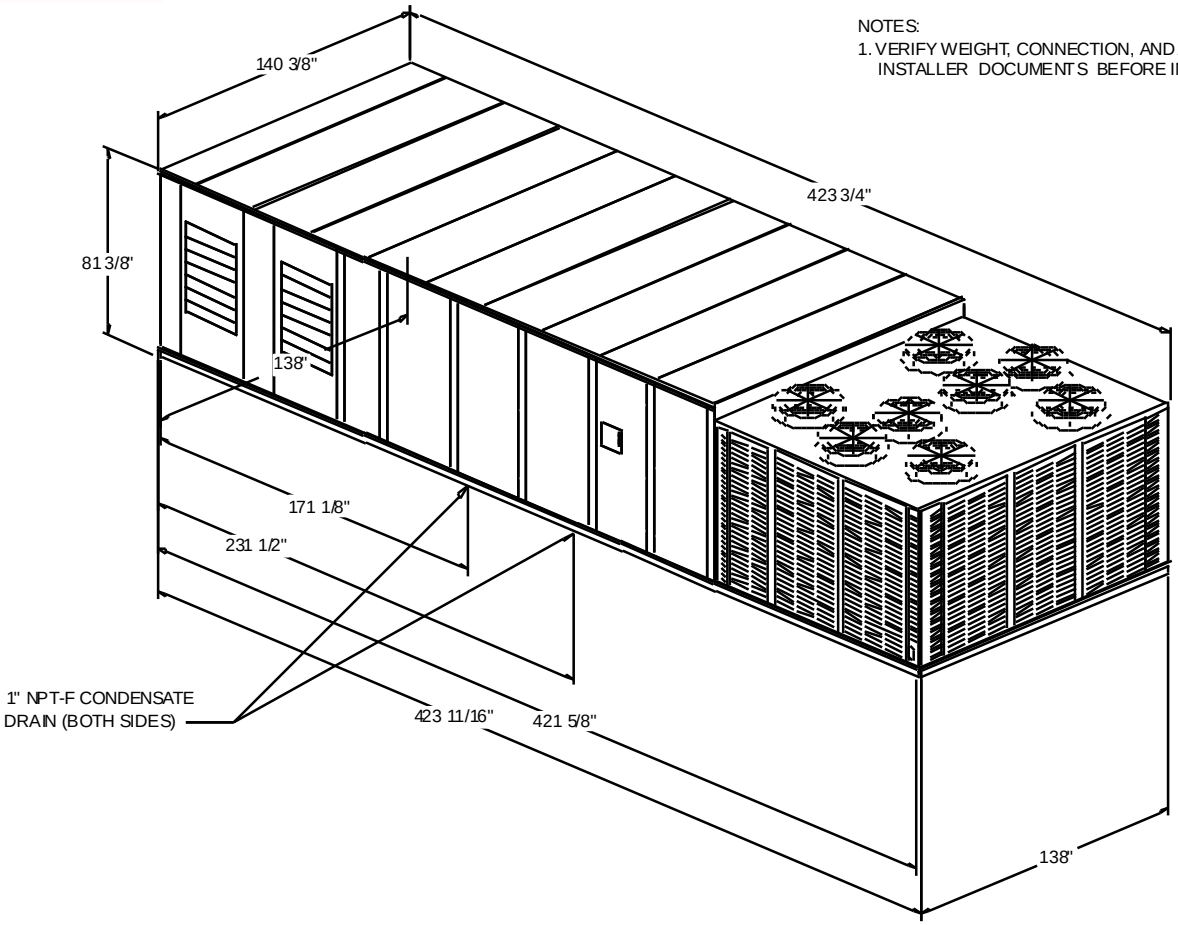

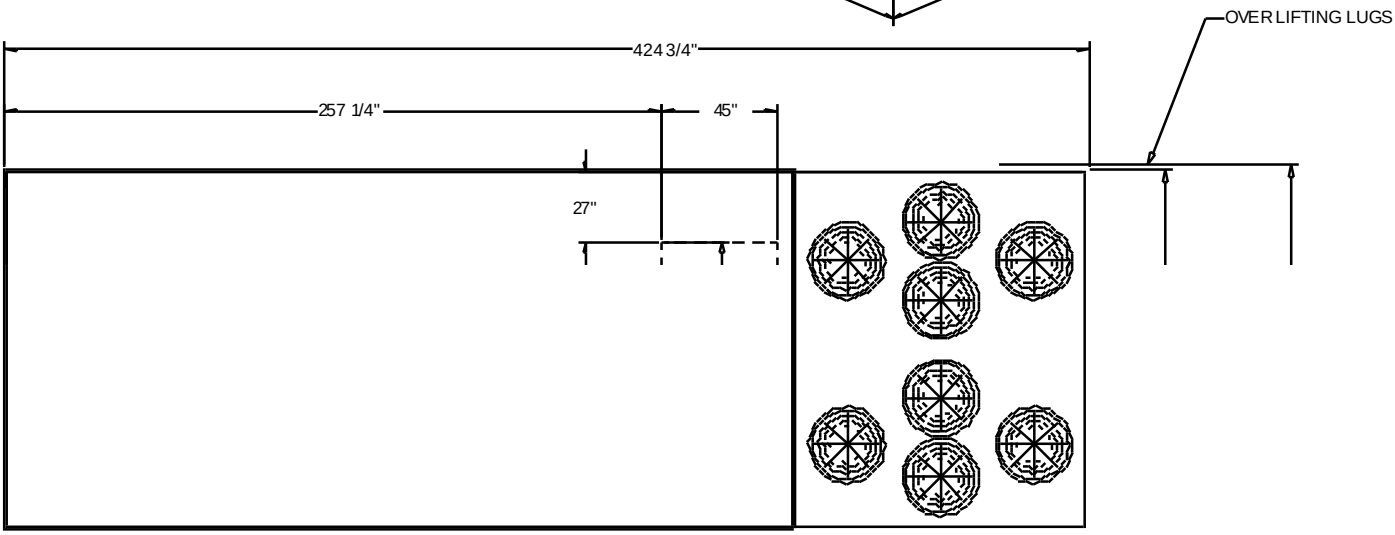

TYPICAL ROOF CURB AND BASE PAN DETAIL

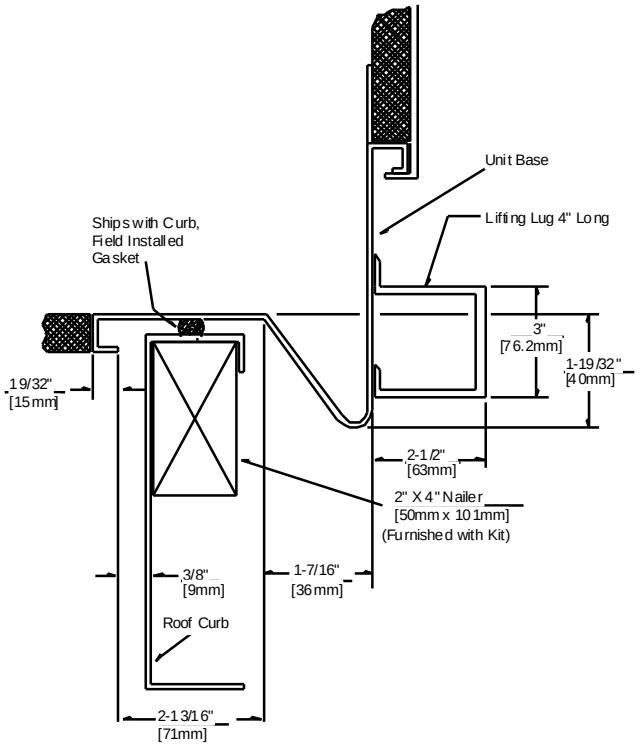

TYPICAL PEDESTAL AND BASE PAN DETAIL

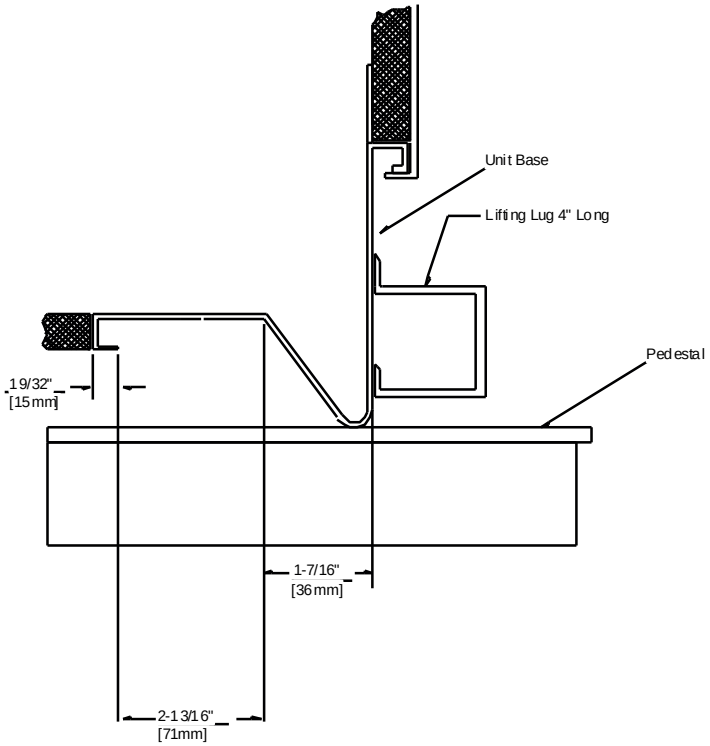

ELECTRICAL / GENERAL DATA

GENERAL DATA	
Tonnage:	90
Unit Operating Voltage Range:	414 - 506
Unit Primary Voltage:	460
Unit Hertz:	60
Unit Phase:	3
EER	11.0 EER

ELECTRIC HEATER	
Electric Heater kw	
Electric Heater Full Load Amps	

HEATING - PERFORMANCE	
Heat Input:	
Heat Output:	
Capacity Steps:	

HEATING - GENERAL DATA	
Gas Inlet Pressure (in w.c.):	
Gas Pipe Connection Size:	

COMPRESSOR	Circuit #1	Circuit #2
Number:	2	2
Tons (Each) (5):	20/20	20/20
Compressor Rated Load Amps (Each):	37.20 A	0.00 A
Locked Rotor Amps (Each):	215.0 / 215.0	215.0 / 215.0

SUPPLY FAN MOTOR	
Number:	2
Horsepower (Each):	20.0
Supply Fan Motor Full Load Amps (Each):	24.70 A

EXHAUST FAN MOTOR	
Number:	1
Horsepower (Each):	15.0
Exhaust Fan Motor Full Load Amps (Each):	18.00 A

CONDENSOR FAN MOTOR	
Number:	8
Horsepower (Each):	1.0
Condensor Fan Motor Full Load Amps (Each):	14.40 A

REFRIGERANT	
Refrigeran Type:	R-410A
Factory Charge (Circuit #1) (6):	64.8 lb
Factory Charge (Circuit #2) (6):	64.8 lb

FILTERS - TYPE	
Type:	Throwaway
Furnished:	Yes
Number:	25
Recommended Size:	24" x 24" x 2"

FINAL FILTERS - TYPE	
Type:	
Furnished:	
Number:	
Recommended Size:	

Cooling MCA = (1.25 x LOAD 1) + LOAD 2 + LOAD 4

Cooling MOP= (2.25 x LOAD 1) + LOAD 2 + LOAD 4

Cooling RDE= (1.5 x LOAD 1) + LOAD 2 + LOAD 4

Notes:

1. LOAD 1= Current of the largest motor (Compressor or Fan Motor); LOAD 2=Sum of the currents of all remaining motors LOAD 3= FLA(Full Load Amps) of the electric heater; LOAD 4= Any other load rated at 1 amp or more.
2. For Electric Heat MCA, MOP, RDE values, calculate for both cooling and heating modes.
3. If selected Max Over Cur is less than the Min Cir Amp, then select the lowest maximum fuse size which is equal to or larger than the Min Cir Amp, provided the selected fuse size does not exceed 800 amps.
4. If the selected Recommended Dual Element fuse size is greater than the selected Max Over Cur Protection value, then select the Recommended Dual Element fuse size value to equal the Max Over Protection value.
5.. Compressor KW at AHRI rating conditions of 80/67 -95
6. Refrigerant charge is an approx. value. For a more precise value, see unit nameplate and service instructions.

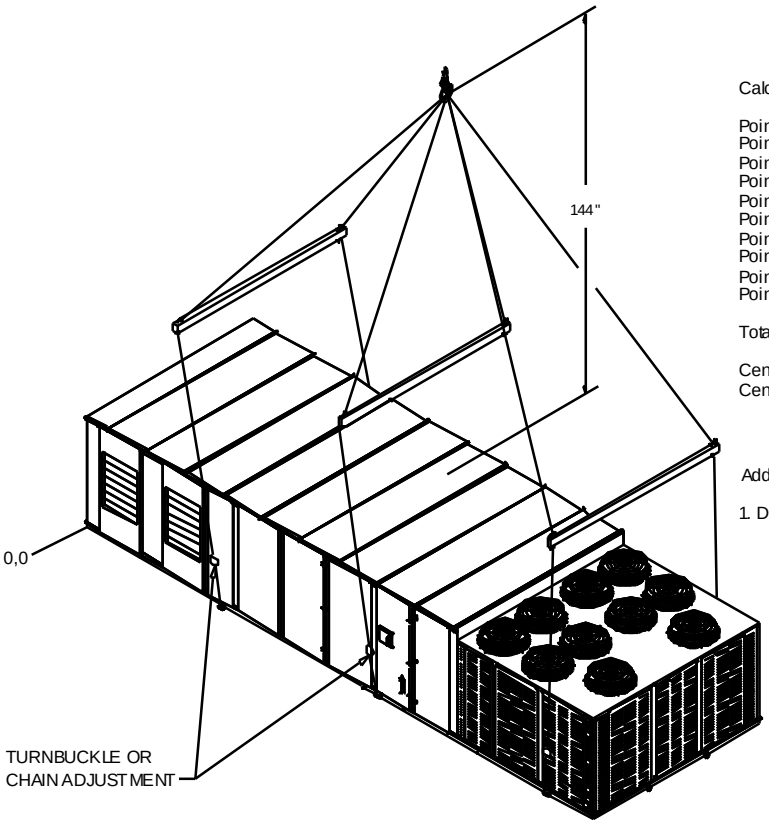

Calculated weight:	N/A
Point Load 1:	1476.8 lb
Point Load 2:	1475.4 lb
Point Load 3:	1489.0 lb
Point Load 4:	1487.7 lb
Point Load 5:	1499.0 lb
Point Load 6:	1497.7 lb
Point Load 7:	1508.9 lb
Point Load 8:	1507.6 lb
Point Load 9:	1518.1 lb
Point Load 10:	1516.7 lb
Total Weight:	14977.0 lb
Center f Grivity x:	17.51 ft
Center of Grivity y:	5.83 ft

Point Load Location
Installed X dimension 1:: 4.000 in
Installed Y dimension 1:: 4.000 in
Installed X dimension 2:: 120.000 in
Installed Y dimension 2:: 136.000 in
Installed X dimension 3:: 215.000 in
Installed X dimension 4:: 309.000 in
Installed X dimension 5:: 396.000 in

Add Weight

1. Double Wall Wieght: N/A[3]

Notes:
1. The actual weight is stamped on the unit nameplate.
2. The weight shown represents the typical unit operating weight for the configuration selected. Estimated at +/- 10% of the nameplate weight.
3. Add weight to the total unit weight.
4. Design special weights are not displayed. Any weight added through COD (Custom Order Design) will not be accounted in the +/- 10% estimate
5. When 2 or more units are to be placed side by side, the distance between the units should be increased to 150% of the recommended single unit clearance. The units should also be staggered to reduce span deflection & assure proper diffusion of exhaust air.

RIGGING

ISOMETRIC VIEW OF UNIT

SERVICE CLEARANCE

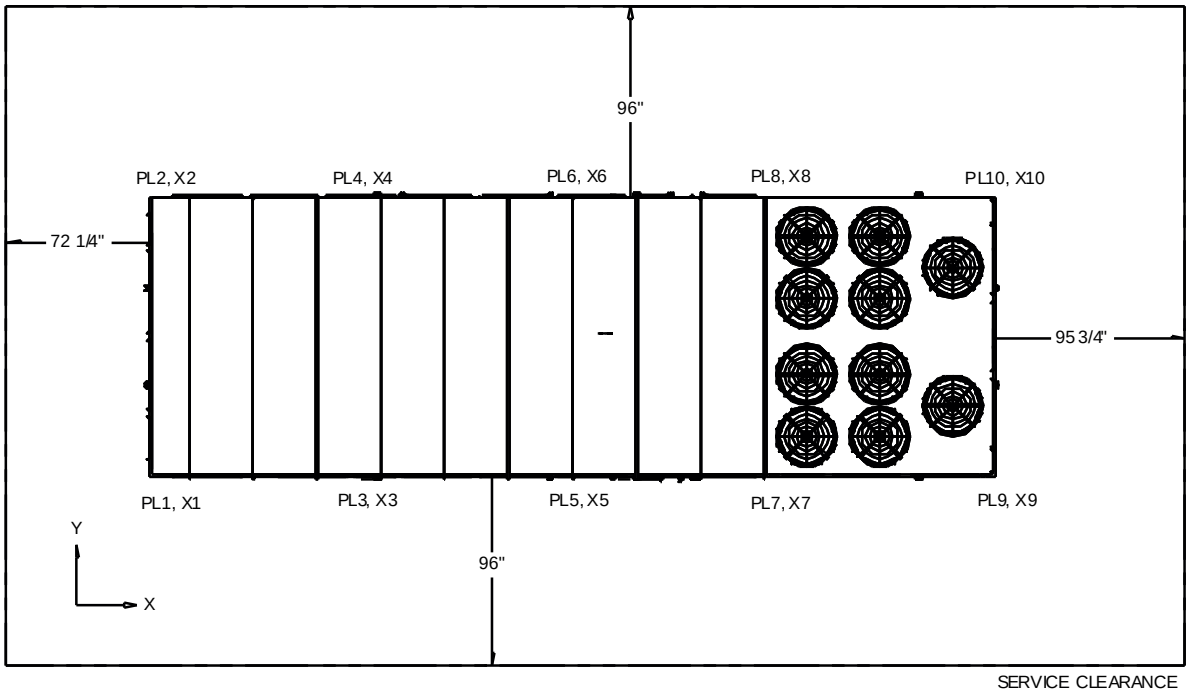

SERVICE CLEARANCE

CENTER OF GRAVITY AND CLEARANCES

PLAN VIEW OF UNIT

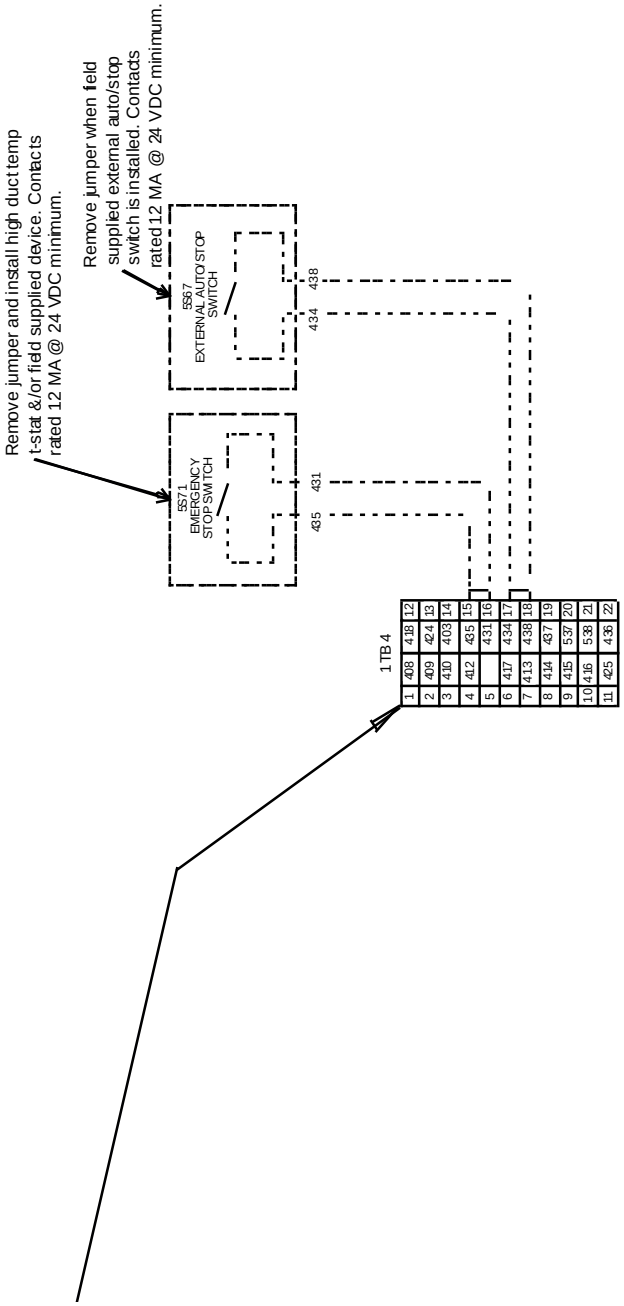
Remove jumper and install high duct temp t-stat &/or field supplied device. Contacts rated 12 MA @ 24 VDC minimum.
Remove jumper when field supplied external auto/stop switch is installed. Contacts rated 12 MA @ 24 VDC minimum.
5S71
EMERGENCY STOP SWITCH
5S67
EXTERNAL AUTO/STOP SWITCH
431
435
434
438
1TB4
1 408
2 409
3 410
4 412
5
6 417
7 413
8 414
9 415
10 416
11 425
12 418
13 424
14 403
15 435
16 431
17 434
18 438
19 437
20 537
21 538
22 436

General

Units shall be specifically designed for outdoor rooftop installation on a roof curb and be completely factory assembled and tested, piped, internally wired, fully charged with R-410A compressor oil and shipped in one piece. Units shall be available for direct expansion cooling only, or direct expansion cooling with natural gas, electric, hot water or steam heating. Filters, outside air system, exhaust air system, optional non-fused disconnect switches and all operating and safety controls shall be furnished factory installed. All units shall be cULus approved and factory run tested. Cooling capacity shall be rated in accordance with AHRI Standard 360. All units shall have decals and tags to aid in service and indicate caution areas. Electrical diagrams shall be printed on long life water resistant material and shall ship attached to control panel doors.

Unit Casing

Exterior panels shall be zinc coated galvanized steel, phosphatized and painted with a slate gray air-dry finish durable enough to withstand a minimum of 672 hours consecutive salt spray application in accordance with standard ASTM B117. Screws shall be coated with zinc-plus-zinc chromate. Heavy gauge steel hinged access panels with tiebacks to secure door in open position shall provide access to filters and heating sectionsInterior surfaces or exterior casing members will have 1/2"" [12.7 mm] Tuf-Skin fiberglass insulation. Unit base will be watertight with 14 gauge formed load bearing members, formed recess and curb overhang. Unit lifting lugs will accept chains or cables for rigging. Lifting lugs will also serve as unit tie down points."

IntelliPak Replacement Unit (IRU)

The IntelliPak replacement solution shall include a
condenser base pan, strengthening of the condenser section with welded reinforcement of condenser base rail, as well as welded integral supports to the condenser base. This additional strength shall allow the reuse of the existing pedestal as well as any Trane full perimeter curb and reduce installation risk and labor. Also optional with stainless steel.

Hinged Access Doors

Hinged access doors shall provide easy access to supply fan, filters, exhaust fan, and heating section.These access doors shall feature double wall construction with dual density insulation sandwiched between heavy gauge galvanized steel panels for strength and durability

Scroll Compressors

The Trane Scroll compressor shall be industrial grade, direct drive 3600 RPM maximum speed scroll type. The motor shall be suction gas-cooled hermetic design. Compressor shall have centrifugal oil pump with dirt separator, oil sight glass, and oil charging valve.
Compressor shall also be provided with thermostatic motor winding temperature control to protect against excessive motor temperatures resulting from over-/under-voltage or loss of charge, high and low pressure cutouts, and reset relay.

Evaporator Coil

Internally enhanced seamless copper tubing of 1/2 "" [12.7 mm] O.D. shall be mechanically bonded to heavy-duty aluminum fins of configured design. The coils shall be be equipped with thermal expansion valves and factory pressure and leak tested.

Air-Cooled Condenser Coil

Condenser coils shall have all Aluminum Microchannel coils. All coils shall be leak tested at the factory to ensure pressure integrity. The condenser coil is pressure tested to 650 psig. Subcooling circuit(s) shall be provided as standard.

High Efficiency Condenser Coil

Additional rows of coil shall provide increased efficiency compared to standard coils.

High Capacity Evaporator Coil

Additional rows of coil and enhanced evaporator tube surfaces shall provide increased capacity as compared to standard coils.

Supply Fan (90-130T)
All supply fans shall have two independent fan assemblies with double inlet, air foil fan, motor and fixed pitch sheave drive. All fans shall be statically and dynamically balanced and tested in factory. Supply fans shall be test run in unit as part of unit test. Unit shall reach rated rpm before fan shaft passes through first critical speed. Fan shafts shall be mounted on two grease lubricated ball bearings designed for 200,000 hours average life. Optional extended grease lines shall allow greasing of bearings from unit filter section. Fan motor and fan assembly shall be mounted on common base to allow consistent belt tension with no relative motion between fan and motor shafts. Entire assemblies shall be completely isolated from unit and fan board by two-inch deflection spring isolators. All 60 Hz supply fan motors meet the Energy Independence Security Act of 2007 (EISA)

Variable Air Volume Supply Air Temperature Control
The unit shall be provided with all the necessary controls to operate a variable air volume rooftop from the discharge air temperature, including discharge air microprocessor controller and discharge air sensor. The microprocessor controller shall coordinate the economizer control and the stages of cooling with zone or outdoor air reset capabilities and an adjustable control band to fine-tune the control to specific applications.

Variable Frequency Drive
Unit shall include factory-installed and tested variable frequency drive[s] (VFD) to provide motor speed modulation. The VFD shall receive a 0-10VDC speed signal from the unit controller. The drive will respond to the signal by accelerating or decelerating to maintain the controlling set point (duct static, space pressure, etc). VFD shall also include the following features:

1. Designed, constructed, and tested in accordance with NEMA ICS, NFPA, and IEC standards and housed in a plastic IP20 enclosure.

2. DC link reactors on both the positive and negative rails of the DC bus equal to 3% impedance to minimize power line harmonics.

3. Full rated output current continuously - 110% of rated current for 60 seconds and 160% of rated current for up to 0.5 second while starting.

4. Isolation between the Drive's power circuitry and control circuitry to ensure operator safety and to protect connected electronic control equipment from damage caused by
   voltage spikes, current surges, and ground loop currents.

5. Audible noise reduction through automatic adjustment of the carrier frequency and frequency avoidance.

6. Rated at 40C with a standard operating range of -10 to 50C (14 to 124F) ambient temperatures and 0 to 95% relative humidity

7. Self-diagnostics and motor protections such as: cULus listed overload, phase loss, and internal thermal overload.

8. Off/Stop and Auto/Start selector switches to start and stop the AC Drive and determine the speed reference.

   a. On units with bypass, an AC Drive/Off/Bypass hand selector switch shall be provided in the unit control box

   b. In DRIVE mode speed reference shall be provided by a 0-10 VDC analog input

9. A keypad interface which shall be programmable by language and feature multiple lines for easy reading.

10. Controlled and/or accessible points such as AC Drive Start/Stop, speed reference, and fault diagnostics.

11. Meter points such as motor power in HP, motor power in kW, motor kW-hr, motor current, motor voltage, hours run, DC link voltage, thermal load on motor,
    Thermal load on AC
    Drive and Heatsink temperature.
12. Troubleshooting features such as:
    a. AC Drive memory storage of the last 10 faults and related operational data

    b. Four simultaneous displays: frequency or speed, run time, output amps and output power

    c. Keypad which shall display: Reference Signal Value, Output Frequency in Hz or percent, Output Amps, Motor HP, Motor kW, kW

13. Coated circuit boards for protection against corrosive environments

14. Field readable BACnet points to allow for communication of stauts, setpoints and diagnostics to the BAS.

Two-inch Spring Isolators
Supply and Exhaust fan (if applicable) assemblies shall be isolated with two-inch nominal deflection to reduce transmission of vibrations

100 Percent Exhaust with Statitrac
Two, double-inlet, forward-curved fans shall be mounted on a common shaft with fixed sheave drive. All fans shall be dynamically balanced and tested in factory before being installed in unit. Exhaust fan shall be test run as part of unit final run test. Unit shall reach rated rpm before fan shaft passes through first critical speed. Fan shaft shall be mounted on two grease lubricated ball bearings designed for 200,000-hour average life. Optional extended grease lines shall be provided to allow greasing of bearings from unit filter section. Fan motor and assembly shall be mounted on common base to allow consistent belt tension with no relative motion between fan and motor shafts. Entire assembly shall be completely isolated from unit and fan board by double deflection, rubber in shear isolators or spring isolation on motor sizes larger than five hp. For both CV and VAV rooftops, the 100 percent modulating exhaust discharge dampers (or VFD) shall be modulated in response to building pressure. A differential pressure control system, (Statitrac), shall use a differential pressure transducer to compare indoor building pressure to outdoor ambient atmospheric pressure. The FC exhaust fan shall be turned on when required to lower building static pressure setpoint. The (Statitrac) control system shall then modulate the discharge dampers (or VFD) to control the building pressure to within the adjustable, specified dead band that shall be adjustable at the Human Interface Panel. All 60 Hz exhaust fan motors meet the Energy Independence Security Act of 2007 (EISA).

0-100 Percent Economizer
Automatically modulating return and outside air dampers assist in the maintaining of the control temperature setpoint to allow "free" cooling. The economizer is equipped with an automatic lockout when the outdoor enthalpy/temperature is not suitable for space temperature control. Minimum position is standard and adjustable with either the Human Interface Control, remote potentiometer, or through the building management system. A spring return actuator insures closure of the outside air dampers during shutdown or power interruption. Mechanical cooling is available to assist the economizing mode. Low leak dampers are standard with a leakage rate of 2.5 percent of nominal airflow of 400 Cfm/ton [189 L/s] per ton at a static pressure of 1" [25.8 mm] w.c.

0-100 percent modulating economizer
Operated through the primary temperature controls to automatically utilize OA for "free" cooling. Automatically modulated return and OA dampers shall maintain proper temperature in the conditioned space. Economizer shall be equipped with an automatic lockout when the outdoor high ambient temperature is too high for proper cooling. Minimum position control shall be standard and adjustable at the Human Interface Panel or with a remote potentiometer or through the building management system. A spring return motor shall ensure closure of OA dampers during unit shutdown or power interruption. Mechanical cooling shall be available to aid the economizer mode at any ambient. Low leak economizer dampers shall be standard with a leakage rate of 2.5 percent of nominal airflow (400 CFM/ton) at 1" w.g. static pressure.

Digit23/Economizer Comparative Enthalpy Control
Two enthalpy sensors shall be provided to compare total heat content of the indoor air and outdoor air to determine the most efficient air source when economizing.

Ultra-Low Leak Damper
Economizer return and fresh air dampers shall be provided with horizontal airfoil blades and spring-return actuators. The economizer shall have a functional life of 60,000 opening and closing cycles. Dampers shall be AMCA 511 Class 1A certified with a maximum leakage rate of 3 CFM/sqft at 1.0 inWC pressure differential thus exceeding requirements of ASHRAE 90.1-2013, California Title 24-2013, and IECC-2012. Fault Detection and Diagnostic (FDD) control will also be provided with Ultra Low Leak Economizers. FDD control monitors the commanded position of the economizer compared to the feedback position of the damper. If the damper position is outside +/- 10% of the commanded position, a diagnostic is generated.

Ultra-Low Leak motorized exhaust dampers will be provided when the Ultra-Low Leak Economizer is ordered with an exhaust/return option that includes motorized dampers. Ultra Low Leak motorized exhaust dampers will be AMCA 511 Class 1A certified with a maximum leakage rate of 3 CFM/sq-ft at 1.0 inWC pressure differential. This exceeds the most stringent requirements of ASHRAE 90.1 and IECC (4 CFM/sq-ft at 1.0 inWC pressure differential).

Throwaway Filters, MERV 4
Filters are 2"" [50.8 mm] thick, UL Class 2, glass fiber type. Filters rated at 80% average synthetic dust weight arrestance when tested in accordance with ASHRAE 52-76 and 52.1 test methods. Filters mounted in galvanized steel rack.

Controls
The rooftop unit shall utilize a DDC microprocessor control system which is suitable for CV and VAV applications. The control system shall be factory installed in the main control panel with the necessary internal controls and run tested. Terminal blocks for field power wiring connections shall be standard. Units shall provide a location for a non-fused disconnect switch with an external handle for safety. Unit mounted microprocessor controls shall provide compressor anti-short cycle protection. The unit shall be equipped with a Human Interface Panel with a 16 key keypad, a 2 line by 40 character English display to provide the operator with full adjustment and display of control data function. The unit controls can be used as a stand-alone controller or as part of a building management system.

BACnet Communication Interface Module (BCI)
Shall provide control and monitoring of the rooftop by Tracer SC or a 3rd party building management system utilizing BACnet protocol.

Unit Non-Fused Disconnect
External handle shall enable the operator to disconnect unit power with the control box door closed for safety.

Unit Interrupt Rating (Standard Short Circuit Current Rating-SCCR)
A 5,000 Amp rating shall be applied to the unit enclosure using a non-fused circuit breaker for disconnect switch purposes. Fan motors, compressors, and electric heat circuits shall be provided with series rated circuit breakers that will provide the unit rated level of protection. The unit shall be marked with approved cULus markings and will adhere to cULus regulations.

RTU-2

S_HG13

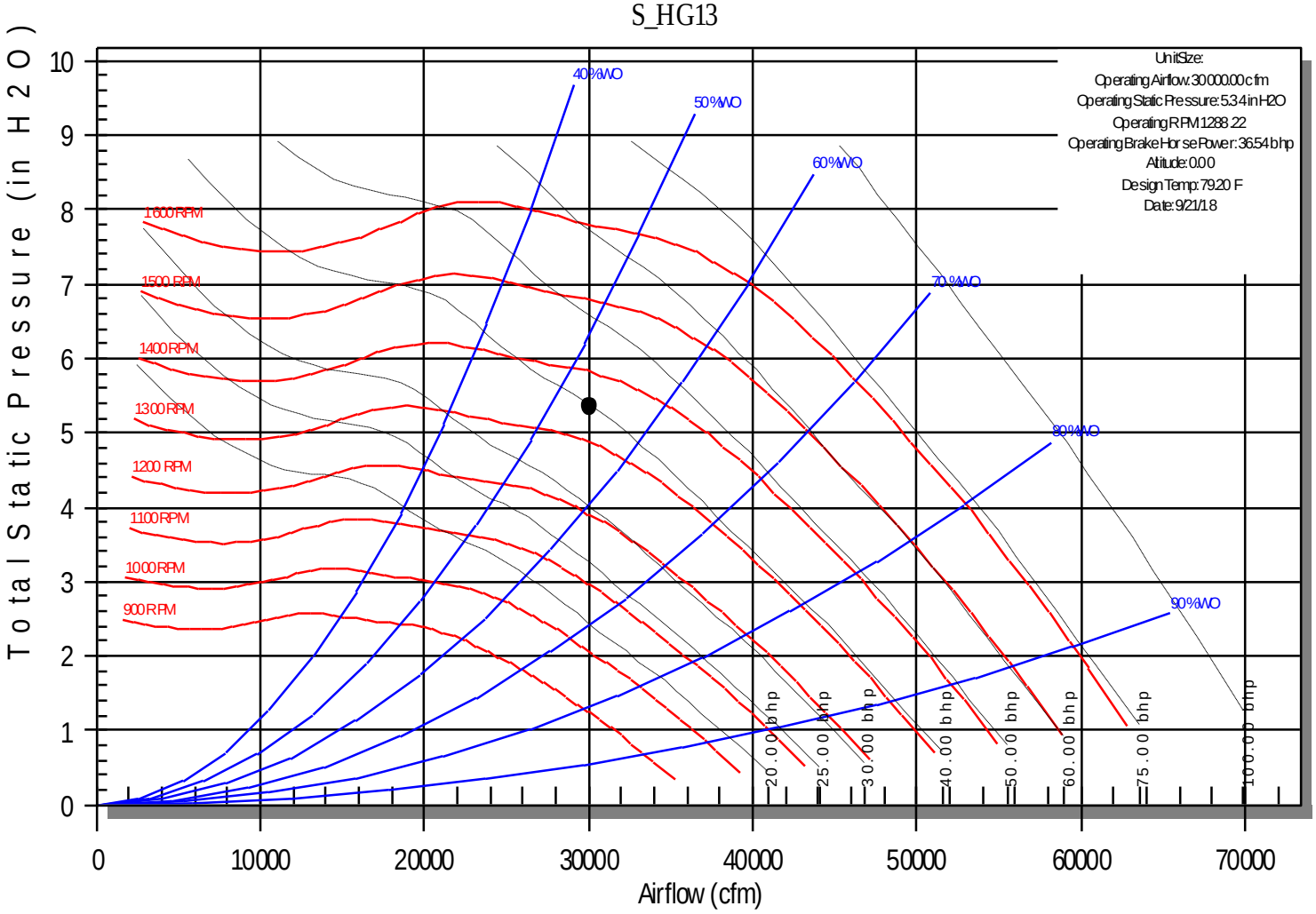
Total Static Pressure (in H2O)
Airflow (cfm)
0
10000
20000
30000
40000
50000
60000
70000
0
1
2
3
4
5
6
7
8
9
10
1600 RPM
1500 RPM
1400 RPM
1300 RPM
1200 RPM
1100 RPM
1000 RPM
900 RPM
40%WO
50%WO
60%WO
70%WO
80%WO
90%WO
20.00 bhp
25.00 bhp
30.00 bhp
40.00 bhp
50.00 bhp
60.00 bhp
75.00 bhp
100.00 bhp
Unit Size:
Operating Airflow: 30000.00 cfm
Operating Static Pressure: 5.34 in H2O
Operating RPM: 1288.22
Operating Brake Horse Power: 36.54 bhp
Altitude: 0.00
Design Temp: 79.20 F
Date: 9/21/18

CREST COMMERCIAL CONDENSING BOILER

Submittal Sheet

Lochinvar®
HIGH EFFICIENCY BOILERS & WATER HEATERS

MODELS FB 0751 - FB 6001

AHRI CERTIFIED™ www.ahridirectory.org

FBN-Sub-09

Job Name: Downers Grove Library

Location:

Contractor:

Type Gas: Natural Gas

Engineer: AMK

Model #: FBN 1501

Agent/Wholesaler:

Equipment Tag(s):

SIDE

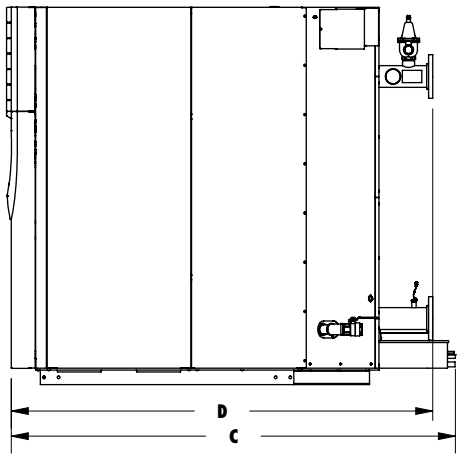

BACK

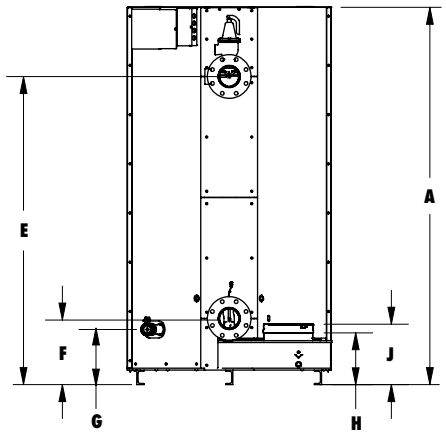

TOP

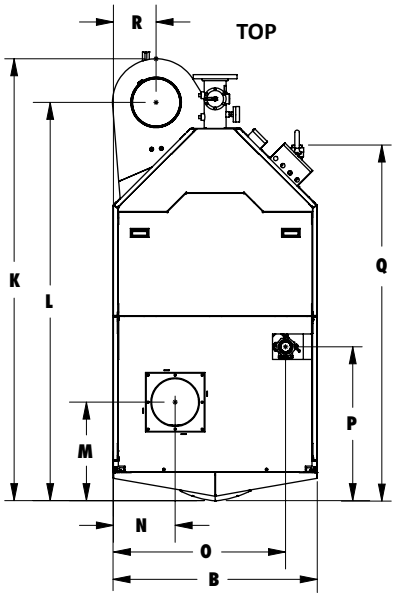

JOB NOTES:

Notes:

- * *Insert "N" for natural gas, "L" for LP gas models and "D" for dual fuel.*
- *Indoor installation only. Information subject to change without notice.*
- *Low NOx Operation.*
- *Lochinvar should be consulted before selecting a boiler for installations having unusual piping and pickup requirements, such as intermittent system operation, extensive piping systems, etc.*
- *The ratings have been determined under the provisions governing forced draft burners.*
- *The Net AHRI water ratings shown are based on a piping and pickup allowance of 1.15.*

	Model Number	Input MBH Min	Input MBH Max	Thermal %	Gross Output MBH	Net AHRI Rating MBH	Turn-down	A	B	C	D	E	F	G	H	J	K	L	M	N	O	P	Q	R	Gas Conn.	Water Inlet/ Outlet	Air Intake	Vent Size	Oper. Weight (with water)	Ship. Weight (lbs.)
○	FB*0751	50	750	96.2%	722	628	15:1	78″	30″	55-1/2″	57-5/8″	66-1/8″	11-7/8″	11-3/8″	11-1/4″	12-1/2″	55″	51″	13″	8-3/4″	26-3/4″	23-3/4″	49-1/2″	7-3/8″	1-1/4″	3″	6″	6″	1,768	1,560
○	FB*1001	50	1,000	96.2%	962	837	20:1	78″	30″	56-1/2″	57-5/8″	66-1/8″	11-7/8″	11-3/8″	11-1/4″	12-1/2″	56″	51″	13″	8-3/4″	26-3/4″	23-1/8″	49-1/2″	6-1/2″	1-1/4″	3″	6″	6″	1,838	1,596
○	FB*1251	63	1,250	96.2%	1,203	1,046	20:1	78″	30″	56-1/2″	57-3/4″	66-1/8″	11-7/8″	11-3/8″	11-1/4″	12-1/2″	56″	51-3/8″	13″	8-3/4″	26-3/4″	21-5/8″	49-1/2″	6-1/2″	1-1/4″	3″	6″	8″	1,975	1,648
✓	FB*1501	60	1,500	96.2%	1,443	1,255	25:1	78″	30″	67-3/4″	68″	65-3/8″	12-3/8″	11-3/8″	11-1/4″	12-1/2″	67-1/4″	62-3/8″	15-7/8″	9″	26-7/8″	27-7/8″	59-1/4″	5-1/8″	1-1/2″	4″	8″	8″	2,307	1,961
○	FB*1751	70	1,750	96.2%	1,684	1,464	25:1	78″	30″	66-1/4″	68″	65-3/8″	12-3/8″	11-3/8″	11-1/4″	12-1/2″	65-3/4″	61-1/2″	15-7/8″	9″	27″	27-1/8″	58-3/4″	5-1/8″	1-1/2″	4″	8″	8″	2,458	2,017
○	FB*2001	80	1,999	96.2%	1,924	1,673	25:1	78″	30″	66-1/2″	68″	65-3/8″	12-3/8″	11-3/8″	11-1/4″	12-1/2″	66″	61-1/2″	15-7/8″	9″	27″	26-3/4″	58-3/4″	5-1/8″	1-1/2″	4″	8″	8″	2,570	2,087
○	FB*2501	125	2,500	96%	2,400	2,087	20:1	77-3/4″	35″	83-3/4″	83-3/4″	63-3/4″	13-1/2″	11-1/4″	10-1/2″	12-1/4″	83-1/4″	76-1/4″	19-3/4″	9-1/4″	28-3/4″	32″	71″	7-1/4″	2″	4″	8″	9″	3,600	2,577
○	FB*3001	150	3,000	96%	2,883	2,507	20:1	77-3/4″	35″	83-3/4″	83-3/4″	63-3/4″	13-1/2″	11-1/4″	10-1/2″	12-1/4″	83-1/4″	76-1/4″	19-3/4″	9-1/4″	28-3/4″	32″	71″	7-1/4″	2″	4″	10″	10″	3,900	2,881
○	FB*3501	175	3,500	96%	3,364	2,925	20:1	77-3/4″	42″	91-1/2″	86-3/4″	63-1/2″	13-1/4″	11-1/2″	10-3/4″	12-1/2″	91″	82″	20-1/4″	12-3/4″	35-1/2″	31-3/4″	73-1/4″	8-3/4″	2″	4″	10″	10″	4,600	3,218
○	FB*4001	333	3,999	96%	3,843	3,342	12:1	77-3/4″	45-1/2″	103-1/2″	99″	63-1/2″	13-3/4″	11-1/2″	10-3/4″	12-1/2″	103″	94″	24-3/4″	13-1/2″	39-1/2″	42-1/4″	85-1/4″	10-1/2″	2-1/2″	4″	12″	12″	5,200	3,805
○	FB*5001	500	4,999	96%	4,804	4,177	10:1	77-3/4″	46-1/2″	102-1/4″	99-1/2″	63-1/2″	15″	11-1/2″	10-3/4″	12-1/2″	101-3/4″	92-1/2″	22″	14″	39-3/4″	39-1/2″	84″	9″	2-1/2″	6″	12″	14″	5,900	4,101
○	FB*6001	600	6,000	96%	5,766	5,014	10:1	77-3/4″	50″	102-3/4″	99-3/4″	63-1/4″	14-3/4″	11-1/2″	10-3/4″	12-1/2″	102-1/2″	93-1/4″	20″	15-3/4″	43-1/2″	36-1/2″	83-3/4″	9-1/4″	2-1/2″	6″	14″	14″	6,900	4,711

CREST®
CONDENSING BOILER

Codes & Registrations

- ANSI Z21.13/CSA Certified
- ASME Certified, "H" Stamp / National Board
- California Code Compliant
- Canadian Registration Number (CRN)
- CSD1 / Factory Mutual / GE Gap Compliant
- South Coast Air Quality Management District Qualified (FB 0751-2001)

Smart Touch™ Features

CON·X·US Remote Connect

SMART TOUCH Touchscreen Operating Control

Full-Color 8" Touchscreen LCD Display

Built-in Cascading Sequencer for up to 8 Boilers
- › Built-in Redundancy
- › Cascade Multiple Sized Boilers
- › Lead/Lag Cascade
- › Efficiency Optimized Cascade

Front-End Loading Capability with Copper-Fin II® and Power-Fin® Boilers

Building Management System Integration with 0-10 VDC Input

BACnet MSTP Communications

Modbus Communication

Outdoor Reset Control with Outdoor Air Sensor

Password Security

Domestic Hot Water Prioritization
- › DHW tank piped with priority in the boiler loop
- › DHW tank piped as a zone in the system with the pumps controlled by the Smart System
- › DHW Modulation Limiting
- › Separately Adjustable SH/DHW Switching Times

Low Water Flow Safety Control & Indication

Inlet & Outlet Temperature Readout

Freeze Protection

Service Reminder

Time Clock

Data Logging
- › Hours Running, Space Heating
- › Hours Running, Domestic Hot Water
- › Hours Running, Modulation Rate
- › Ignition Attempts
- › Last 10 Lockouts

Programmable System Efficiency Optimizers
- › Night Setback
- › Anti-Cycling
- › Outdoor Air Reset Curve
- › Ramp Delay
- › Boost Temperature & Time
- › Modulation Factor Control

Three Pump Control
- › System Pump
- › Boiler Pump
- › Domestic Hot Water Pump

High-Voltage Terminal Strip
- › 120 VAC / 60 Hertz / 1 Phase Power Supply (FB 0751-2001)
- › 208 VAC/ 60 Hertz/ 3 Phase Power Supply (FB 2501-3501)
- › 480 VAC/60 Hertz/3 Phase Power Supply (FB 4001-6001)
- › System Pump, Boiler Pump and DHW Pump Power

Low-Voltage Terminal Strip
- › 24 VAC Auxiliary Device Relay
- › Auxiliary Proving Switch Contacts
- › Alarm on Any Failure Contacts
- › Runtime Contacts
- › DHW Thermostat Contacts
- › Unit Enable/Disable Contacts
- › System Sensor Contacts
- › DHW Tank Sensor Contacts
- › Outdoor Air Sensor Contacts
- › Cascade Contacts
- › 0-10 VDC BMS External Control Contact
- › 0-10 VDC Variable Speed Boiler Pump Control Contact

Standard Features

- Proof of Closure Valve (FB 6001)
- Modulating Burner with up to 25:1 Turndown
- Direct-Spark Ignition
- Low NOx Operation
- Sealed Combustion
- Air Inlet Filter
- Low Gas Pressure Operation
- **Vertical and Horizontal Direct Venting**
  - › Direct Vent up to 100 Feet
  - › PVC, CPVC, Polypropylene or AL29-4C (FB 0751-3501)
  - › AL29-4C (FB 0751-6001)
- ASME "H" Stamped Heat Exchanger
- 316L Stainless Steel Fire Tubes
- 160 psi Working Pressure
- On/Off Switch
- Adjustable High Limit with Manual Reset
- Low Water Cutoff with Manual Reset & Test
- High & Low Gas Pressure Switches w/Manual Reset
- Low Air Pressure Switches
- Condensate Trap w/Blocked Drain Switch
- Drain Valve
- System Sensor
- Outdoor Air Sensor
- Inlet & Outlet Temperature Sensors
- High-Voltage Terminal Strip
- Low-Voltage Terminal Strip
- Downstream Gas Test Cocks
- 50 psi ASME Relief Valve
- Temperature & Pressure Gauge
- Zero Clearances to Combustible Materials
- High Altitude Models Available
- 10-Year Limited Warranty (See Warranty for Details)
- 1-Year Warranty on Parts (See Warranty for Details)

Optional Equipment

- ☐ Alarm Bell
- ☐ BMS Gateway - BACnet IP or LonWorks
- ☐ Condensate Neutralization Kit
- ☐ Common Vent Kits Damper
- ☐ Motorized Isolation Valve
- ☐ Variable Speed Boiler Pump
- ☐ Wireless Outdoor Temperature Sensor
- ☐ 75 psi ASME Relief Valve
- ☐ 100 psi ASME Relief Valve
- ☐ 125 psi ASME Relief Valve
- ☐ 150 psi ASME Relief Valve

Electrical Options (Shipped Loose):
- › FB 0751-2001
  - ☐ 208V/ 3Ø/60 Hz → 120V/ 1Ø/60Hz
  - ☐ 480V/ 3Ø/60 Hz → 120V/ 1Ø/60Hz
  - ☐ 600V/ 3Ø/60 Hz → 120V/ 1Ø/60Hz
- › FB 2501-3501
  - ☐ 480V/ 3Ø/60 Hz → 208V/ 3Ø/60Hz
  - ☐ 600V/ 3Ø/60 Hz → 208V/ 3Ø/60Hz
- › FB 4001-6001
  - ☐ 600V/ 3Ø/60 Hz → 480V/ 3Ø/60Hz

Lochinvar® HIGH EFFICIENCY BOILERS & WATER HEATERS

Lochinvar, LLC
300 Maddox Simpson Parkway
Lebanon, Tennessee 37090
P: 615.889.8900 / F: 615.547.1000
Lochinvar.com

9/18—Printed in U.S.A.

DOWNERS GROVE PUBLIC LIBRARY
BOARD OF TRUSTEES
OCTOBER 24, 2018

ITEM 10
Librarian's Report

Welcome New Trustee, Carissa Dougherty
Carissa Dougherty was appointed to the Library Board of Trustees in October. Unfortunately, due to prior commitments, she is unable to attend the October and November Board meetings. She will be sworn in at the December Board meeting on December 12.

Thank You for Your Service, Ed Earl
Trustee Ed Earl resigned on October 8, effective that day. His service to the library and the Downers Grove community is greatly appreciated! He leaves an unexpired term ending on August 31, 2020.

Construction Begins November 5
A pre-construction meeting with contractors and managers was held October 17. Construction begins Monday, November 5 with the placement of construction barriers and protective coverings. Circulation will be relocated to the former Info Desk and the Teen Services Desk, which will be moved to the lobby for this project. The Graphics & Display Coordinator Melody Danley and Communications Coordinator Christine Niels are working on communications and signage to help inform our public about the construction. Substantial completion is scheduled for December 17, with the punch list completed by December 21. Completion of lobby reconfiguration is scheduled for November 28. The lighting in second floor public areas will likely take the longest to complete.

Medical, Dental, and Vision Insurance Renewal
The Village of Downers Grove's group insurance program will have a 3% increase for medical premiums in 2019. Dental and vision premiums decreased. The new premium structure for Library employee and employer contributions will take effect in 2019. This new structure is based on percentage of premium for employee contribution ranging from 7.5% to 12.5%, depending on plan and benefit option selected.

Board Officer Elections
According to the Board's Bylaws, election of officers occurs "at a regular or special meeting in even numbered years after that year's appointment to the Board has been made." With an additional Trustee scheduled to be appointed by the Village Council in November, the election will take place at the December Board meeting.

DOWNERS GROVE PUBLIC LIBRARY
MEDICAL, DENTAL, AND VISION INSURANCE

	2019 PREMIUMS					
PPO HIGH DEDUCTIBLE $1,500	EMPLOYEE	EMPLOYER	TOTAL	EE %	ANNUAL EMPLOYEE COST	ANNUAL EMPLOYER COST
Employee Only w/Screening	$ 43.79	$ 540.11	$ 583.90	7.5%	$ 525.51	$ 6,481.29
Employee Only w/0 Screening	$ 95.29	$ 540.11	$ 635.40		$ 1,143.51	$ 6,481.29
Employee & Spouse w/2 Screenings	$ 167.87	$ 1,175.07	$ 1,342.94	12.5%	$ 2,014.41	$ 14,100.87
Employee & Spouse w/1 Screening	$ 219.37	$ 1,175.07	$ 1,394.44		$ 2,632.41	$ 14,100.87
Employee & Spouse w/0 Screening	$ 270.87	$ 1,175.07	$ 1,445.94		$ 3,250.41	$ 14,100.87
Employee & Children w/Screening	$ 153.27	$ 1,072.90	$ 1,226.17	12.5%	$ 1,839.26	$ 12,874.79
Employee & Children w/0 Screening	$ 204.77	$ 1,072.90	$ 1,277.67		$ 2,457.26	$ 12,874.79
Family w/2 Screenings	$ 233.56	$ 1,634.89	$ 1,868.45	12.5%	$ 2,802.68	$ 19,618.73
Family w/1 Screening	$ 285.06	$ 1,634.89	$ 1,919.95		$ 3,420.68	$ 19,618.73
Family w/0 Screening	$ 336.56	$ 1,634.89	$ 1,971.45		$ 4,038.68	$ 19,618.73

VEBA PLAN $2,500	EMPLOYEE	EMPLOYER	TOTAL	EE %	ANNUAL EMPLOYEE COST	ANNUAL EMPLOYER COST
Employee Only w/Screening	$ 15.72	$ 612.98	$ 628.70	2.5%	$ 188.61	$7,355.79
Employee Only w/0 Screening	$ 67.22	$ 612.98	$ 680.20		$ 806.61	$7,355.79
Employee & Spouse w/2 Screenings	$ 108.56	$ 1,338.95	$ 1,447.51	7.5%	$ 1,302.76	$16,067.36
Employee & Spouse w/1 Screening	$ 160.06	$ 1,338.95	$ 1,499.01		$ 1,920.76	$16,067.36
Employee & Spouse w/0 Screening	$ 211.56	$ 1,338.95	$ 1,550.51		$ 2,538.76	$16,067.36
Employee & Children w/Screening	$ 99.06	$ 1,221.69	$ 1,320.75	7.5%	$ 1,188.68	$14,660.33
Employee & Children w/0 Screening	$ 150.56	$ 1,221.69	$ 1,372.25		$ 1,806.68	$14,660.33
Family w/2 Screenings	$ 151.34	$ 1,866.55	$ 2,017.89	7.5%	$ 1,816.10	$22,398.58
Family w/1 Screening	$ 202.84	$ 1,866.55	$ 2,069.39		$ 2,434.10	$22,398.58
Family w/0 Screening	$ 254.34	$ 1,866.55	$ 2,120.89		$ 3,052.10	$22,398.58

DOWNERS GROVE PUBLIC LIBRARY
MEDICAL, DENTAL, AND VISION INSURANCE

	2019 PREMIUMS					
DENTAL	EMPLOYEE	EMPLOYER	TOTAL	EE %	ANNUAL EMPLOYEE COST	ANNUAL EMPLOYER COST
Employee Only	$ -	$ 44.95	$ 44.95	0.0%	$ -	$ 539.40
Family	$ 19.16	$ 124.05	$ 124.05	15.4%	$ 229.92	$ 1,488.60

	2019 PREMIUMS					
VISION	EMPLOYEE	EMPLOYER	TOTAL	EE %	ANNUAL EMPLOYEE COST	ANNUAL EMPLOYER COST
Employee Only	$ 0.59	$ 2.29	$ 2.88	20.5%	$ 7.08	$ 27.48
Family	$ 1.64	$ 5.58	$ 7.22	22.7%	$ 19.68	$ 66.96

DOWNERS GROVE PUBLIC LIBRARY
BOARD OF TRUSTEES
OCTOBER 24, 2018

DEPARTMENT REPORTS – SEPTEMBER 2018

Administration – Jen Fredericks

- Worked with and trained new Access Services Manager, Amy Prechel.
- Conducted first and second round interviews for the Community Engagement Coordinator position.
- Met with Dan Pohrte to select and review final finishes for the remodeling project.
- Met with Will Salmon, DuPage PADS Director of Interim Housing, to discuss partnering with PADS and the Downers Grove shelter sites for the 2018-2019 shelter season.
- Worked on the final list of contacts of nonprofit organizations for our upcoming Service Fair.
- Met with Outreach Team and finalized Service Fair invitation and Organization of the Month processes.
- Viewed two CE recordings for the FY19 Library Per Capita Grant requirements:
    - JJ's List Disability Awareness Training
    - Inclusive Programming for Adults with Developmental Disabilities

Adult & Teen Services – Lizzie Matkowski

- ATS Librarians went through the new In Charge training.
- Staff ran the final donation drop-off for the Friends of the Library Book Sale with other DGPL staff and volunteers.
- Karen N attended the Senior Fair at the DG Park District.
- Fred hosted Beans, Books, and Business program in partnership with Peet's Coffee and speaker Peter James. The program was written up in the Bugle.
- Amanda assisted with the DGN Multi Needs class's tour of the library.
- Staff participated in Banned Books Week activities and created a display on the second floor.
- Amanda assisted Erin with the library tour for Little Friends.

Children's Services – Allyson Renell

- With school back in session, the Kids Room was busy during the month of September with a full storytime session and variety of programs for all ages. Staff have been busy during the after school hours helping children find books to read and materials for school projects.
- On September 22, 96 people wiggled and danced along to Jigglejams, a children's concert event.
- The Kids Room began several new outreach partnerships this month with storytime visits to Little People Learning Center and St. Joseph School's preschool classes. The Little

Friends organization also has begun a monthly visit to the library for a program, and Day One Pact's Child and Family Connections program, an early intervention initiative, will be visiting the library monthly for a special storytime.

- Department Manager Allyson Renell and Program Coordinator Traci Skocik attended the ALSC Conference September 26-September 29. They saw a lot of really great sessions and came back with new ideas to implement at DGPL.

<u>Circulation Services</u> – Christine Lees

- The Service Excellence Committee implemented a library-wide "No to Yes Log". This log is used by all staff to record whenever we have to say "no" to a patron request. We plan to use this log to see trends and opportunities to get to yes!
- The Circulation team is reviewing our department policy section as part of the library-wide policy manual review.
- Christine Lees & Cheryl Pawlak, along with Julie and Jen, met with Will Salmon from DuPage PADS to discuss ways to increase the use of Restricted Use cards for shelter residents as well as raising the library profile at the local shelters. We plan on visiting local shelters to register patrons on-site for the Restricted Use library cards as well as offering an on-site book collection. Finally, the Kids Room staff will be providing storytime at family shelter locations as well as crafts for all to enjoy!
- All Circulation staff have been re-trained on emergency procedures thanks to our Circulation Supervisor, Kitty Hoos.
- Circulation Clerk Kelly Kobayashi is the new "Voice of the Library!" Folks calling into the library will now be greeted with Kelly's voice and reordered department menu selections to better direct calls into the library. Great job, Kelly!
- Special thanks to Ian Knorr for arranging our Circulation workroom floors to be stripped and re-waxed. This overhaul was much needed and our floors look great!
- Please help me congratulate Circulation Clerk Cindy Nicolas on 20 years of service at DGPL! We are very thankful to have Cindy on our team!

<u>Information Technology</u> – Paul Regis

- In early September, Director Julie Milavec and IT Manager Paul Regis met with Jason Roloff from ISBS to discuss the library's copier lease. A buy-back plan was discussed, as well as other options, since the current copiers have been very reliable (knock on wood) and supply orders have been prompt. This will be revisited later in the year.
- College of DuPage LTA practicum student Santhi Papruchuri interned in the IT Department towards the middle of the month. She learned about the various roles that IT handles – from both an internal and external support standpoint – as well as the services we offer.
- Assistant IT Manager Max Mogavero's headshots events are usually well attended and September's was no different. During his vacation in mid-to-late August, there were a startling number of requests for this service (which Max graciously accommodated). Additionally, the passport photos events led by Media Lab Coordinator Ed Bromiel have

also been popular. Thankfully it's all digital, otherwise a large chunk of IT's budget would go towards film stock.

- IT Manager Paul Regis discussed implementing a searchable obituary database onto the library website with the site's web developer, Caleb Tucker-Raymond. Technology Trainer Annie Jagielski and Cindy Khatri and Joy Matteson from ATS provided insight into how this service should best serve patrons. Records have been collected by a number of DGPL (and the Downers Grove Historical Society) staff over the past decade or so from local newspapers.

<u>Public Relations</u> – Jen Fredericks

- Held three sessions, two Sundays and one Monday evening, for our Collaborative Art Project with The Art Department. Participants drew, colored, and cut and glued book pages onto blocks. Some blocks were created by more than one individual, others were done solo. A total of 78 blocks were done and they will form an infinite sculpture to be presented at The Art Department's Visual Ensembles Art Show at The TreeHouse in Downers Grove on October 19 – 21. The blocks will also be on display in the library's window display in January. This effort addresses Strategic Plan items.

<u>Access Services</u> – Amy Prechel

Inventory and Cataloging

- For ATS collection: added 1460 print items and 277 AV items; discarded 2954 print items and 139 AV items.
- For Kids Room collection: added 1009 print items and 120 AV items; discarded 744 print items and 92 AV items.
- We claimed 9 magazines that did not arrive when expected. We are working with our account representative to renew all of our subscriptions for the coming year.
- Six crates of withdrawn children's items were donated to Bernie's Book Bank, a literacy organization that connects at-risk children with quality books in the Chicagoland area. 100 children will directly benefit from the library's donation.

Reclassification and Repairs

- Repaired 755 ATS and Kids Room books and audiovisual items.
- MaryKellie Marquez has been giving particular attention to sprucing up the adult AV collection.
- Reclassified 234 ATS and Kids Room items

Projects and Updates

- 47 more items were reclassified for the Great Reads collection, and 41 more items for the CD genre changes. Both projects are now complete aside from occasional stragglers.
- Dozens of boxes of withdrawn material have been prepared for the October book sale. Access staff is looking forward to the boxes vacating after the sale so that space can be transformed into a break area during the upcoming construction.

Staff Training and Professional Development

- Amy Prechel started September 10 and has been working on getting up to speed within the library and on all things Access. Training was done on department procedures, collection ordering, invoicing & reconciliation, and the phone system. Amy attended her first management team meeting on September 19, had a customer service philosophy orientation with director Julie on September 24, and met with Lizzie, Head of ATS, on September 28 to discuss upcoming projects their departments will collaborate on.
- On September 21, Nora Mastny attended the LACONI TSS Cataloging Unconference at the Elk Grove Village Public Library. While she was away, the remainder of the staff had a "poly covers party" to cross train on the application process, which Michelle Litwin quickly mastered!

Facilities Services – Ian Knorr

- Ian gave tours as part of the Person In Charge training.
- Affiliated performed their annual fire device inspection.
- Ian started retro-fitting the 174 light fixtures from the public PC's through Teen Central.
- Office of the State Fire Marshal performed the elevator and dumb waiter tests.
- Ian attended a seminar on how to better serve difficult patrons.

Circulation Statistics	A	B	C	D	E	F	G
1	**Circulation**	**SEP 18**	**%**	**SEPT 17**	**%**	**SEPT 16**	**%**
2	**Checkouts**						
3	Selfchecks	41,345	72%	44,436	70%	45,459	76%
4	Staff desk	16,365	28%	18,749	30%	14,102	24%
5	**Total checkouts**	**57,710**		**63,185**		**59,561**	
6							
7	**Renewals**						
8	Auto Renewal	34,274		33,356			
9	Selfchecks	28		45		1,542	
10	Staff desk (incl. phone)	225		448		2,650	
11	Patron renewals on website	487		600		10,641	
12	Patron renewals on BookMyne	13		4		205	
13	**Total renewals**	**35,027**		**34,453**		**15,038**	
14							
15	**Total item checkout and renewals**	**92,737**		**97,638**		**74,599**	
16							
17	**Digital Circulation**	**8,334**		6,517		7,905	
18							
19	**Total circulation**	**101,071**		**104,155**		**82,504**	
20							
21	**Reserves Processed**						
22	Received from ILL	6,352		6,769		7,137	
23	ILL sent	4,660		4,233		4,603	
24	OCLC requests processed	195		603		731	
25							
26	**Gate count**						
27	North	23,875		25,312		26,997	
28	South	14,088		14,695		15,258	
29	**Total**	**37,963**		**40,007**		**42,255**	
30							
31							
32	**Registrations**						
33	New resident cards	148		162		206	
34	New fee cards	6		1		4	
35	Current borrowers	X		29,347		31,315	
36	Active fee cards	X		123		128	

DOWNERS GROVE PUBLIC LIBRARY

Statistics for September 2018 (FY Jan-Dec)

Circulation

	Sep 2017	Sep 2018	YTD Totals			
Adult	54,334	57,786	461,180	496,273		
Teen	2,511	3,547	19,872	23,735		
Children	38,152	47,361	334,115	388,962		
Download	6,517	8,334	66,791	64,973		
Total	101,514	117,028	881,958	973,943	91,985	10.4%

Circulation - By Item

	Books		Audio		Video		Misc.		Total
Adult	32,644	56.49%	7,468	12.92%	14,047	24.31%	3,627	6.28%	57,786
Teen	3,363	94.81%	107	3.02%	54	1.52%	23	0.65%	3,547
Children	37,763	79.73%	1,766	3.73%	6,495	13.71%	1,337	2.82%	47,361
Total	73,770	67.87%	9,341	8.59%	20,596	18.95%	4,987	4.59%	108,694

Collection - All Items

	Books		Audio		Video		Misc.		Total
Adult	115,146	74.58%	15,113	9.79%	15,196	9.84%	8,939	5.79%	154,394
Children	73,414	84.52%	2,758	3.18%	8,045	9.26%	2,647	3.05%	86,864
Total	188,560	78.16%	17,871	7.41%	23,241	9.63%	11,586	4.80%	241,258

Book Collection

	Sep 2017	Sep 2018				
Adult	127,200	115,146				
Children	74,128	73,414	YTD Totals		YTD Difference	
Total	201,328	188,560	201,328	188,560	-12,768	-6.3%

Audio Collection

	Sep 2017	Sep 2018				
Adult	16,659	15,113				
Children	2,851	2,758	YTD Totals		YTD Difference	
Total	19,510	17,871	19,510	17,871	-1,639	-8.4%

Video Collection

	Sep 2017	Sep 2018				
Adult	16,082	15,196				
Children	7,862	8,045	YTD Totals		YTD Difference	
Total	23,944	23,241	23,944	23,241	-703	-2.9%

Miscellaneous Collection

	Sep 2017	Sep 2018				
Adult	8,799	8,939				
Children	2,645	2,647	YTD Totals		YTD Difference	
Total	11,444	11,586	11,443	11,586	143	1.2%

DOWNERS GROVE PUBLIC LIBRARY

Statistics for September 2018 (FY Jan-Dec)

Rooms & Spaces

		Sep 2017	Sep 2018				
Community Use of Rooms		883	966				
Meeting, Conference, Study Rooms							
Community Use of Spaces		202	129				
Media Lab, STEM Room, Teen Gaming				YTD Totals		YTD Difference	
Rooms and Spaces Total		1,085	1,095	11,109	11,161	52	0.5%

Programs Offered

Library Programs Offered		Sep 2017	Sep 2018				
	Adult	20	32				
	Teen	3	2				
	Children	56	67				
Outreach Programs Offered							
	Adult	8	2				
	Teen	1	4				
	Children	6	14				
Passive Programs Offered							
	Adult	0	0				
	Teen	0	2				
	Children	12	5	YTD Totals		YTD Difference	
Programs Offered Total		106	128	982	1,072	90	9.2%

Program Attendance

Library Program Attendance		Sep 2017	Sep 2018				
	Adult	221	440				
	Teen	38	6				
	Children	1,609	1,577				
Outreach Program Attendance							
	Adult	809	224				
	Teen	8	60				
	Children	150	240				
Passive Program Attendance							
	Adult	0	0				
	Teen	0	29				
	Children	406	319	YTD Totals		YTD Difference	
Program Attendance Total		3,241	2,895	36,737	35,212	-1,525	-4.2%

DOWNERS GROVE PUBLIC LIBRARY

Statistics for September 2018 (FY Jan-Dec)

Gate Count

	Sep 2017	Sep 2018	YTD Totals		YTD Difference	
	40,007	37,963	404,028	378,674	-25,354	-6.3%

Reference Questions

	Sep 2017	Sep 2018	YTD Totals		YTD Difference	
One on One Tutorials	22	20	244	271	27	11.1%

Computer User Sessions

	Sep 2017	Sep 2018				
Adult	3,912	3,442				
Children	1,007	858	YTD Totals		YTD Difference	
Total	4,919	4,300	49,029	44,516	-4,513	-9.2%
Wireless Sessions	2,542	2,695	20,827	23,167		